RIFLE

1961

RIFLE, U. S. CAL. .30, M1

NATIONAL MATCH AND AMMUNITION

NATIONAL MATCHES

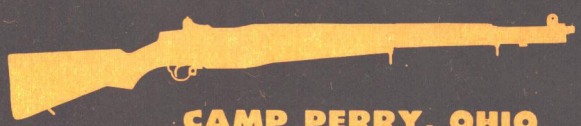

CAMP PERRY, OHIO

U. S. ARMY ORDNANCE CORPS.

ORDNANCE WEAPONS COMMAND-SPRINGFIELD ARMORY / ORDNANCE AMMUNITION COMMAND-FRANKFORD ARSENAL

HEADQUARTERS
DEPARTMENT OF THE ARMY
OFFICE OF THE CHIEF OF ORDNANCE
WASHINGTON 25, D. C.



The Ordnance Corps is happy to present this brochure for your information. The following pages reveal something of the "who and how" of producing the weapons and ammunition issued at the National Matches.

Springfield Armory, an Arsenal Member of the U. S. Army Ordnance Weapons Command, has the major responsibility for developing the best possible small arms for the Armed Forces of the United States. The Small Arms Industry of this country frequently assists in that effort, and in producing.

The U. S. Army Ordnance Ammunition Command is charged with the supply of the selected ammunition lots. Frankford Arsenal actually makes the military ammunition, controlling its quality, and selecting the best lots for the high accuracy standard required at the National Matches.

The U. S. Army Ordnance Training Command at Aberdeen Proving Ground, the U. S. Army Ordnance Major Item Supply Management Agency at Letterkenny Ordnance Depot, and of course Erie Ordnance Depot, next to Camp Perry, (and sometimes other depots) combine their efforts to provide the best possible support for you at the National Matches.

We in Ordnance get many valuable suggestions from the shooters, the National Rifle Association, the National Board for the Promotion of Rifle Practice, and individuals and spokesmen for other interested organizations. They have contributed much to our ability to furnish good weapons and ammunition to the National Matches. Views of experienced competitors and other responsible authorities are welcome and will be given careful consideration.

J. H. HINRICHS
Lieutenant General, USA
Chief of Ordnance

RIFLE, U.S. CAL. .30, M1, NATIONAL MATCH

PART I — HISTORY

1. In March, 1953, Springfield Armory was directed by Office, Chief of Ordnance to furnish 800 U.S. Cal. .30 M1, Rifles for use at the National Matches. These rifles were to be selected as being of excellent quality and workmanship and should possess accuracy (size of groups), and targeting (location of group), capabilities superior to the average service weapon. The Armory, at that time, was manufacturing new M1 rifles, a situation which naturally lessened the work required to produce the desired lot of match quality guns. Because of the high standards to which the service rifles were being produced it was necessary to apply only minor gunsmithing to any weapon to obtain National Match quality.

2. In the succeeding years from 1954 through 1961 the Armory produced National Match quality weapons by two methods, namely; (1) by applying minor gunsmithing operations to newly manufactured rifles as described in the preceding paragraph and (2) by rebuilding National Match weapons returned to the installation from various locations throughout the world. The latter procedure requires a considerable amount of inspection, refinishing, and rebuilding of weapon components. This work is necessary to eliminate parts which evidence excessive wear or which have been altered in the field for some particular reason. Each rebuilt National Match rifle is rebarrelled, restocked and glass bedded.

3. Inasmuch as production of new Cal. .30, M1 Rifles has been completely curtailed, M1, NM Rifles to be issued during the 1961 National Matches are rebuilt weapons. However, because of the critical acceptance standards applicable to National Match rifles, and because of the expert workmanship employed to meet these standards it is not likely the user will be able to distinguish between new and rebuilt weapons either in appearance or performance.

4. The following year by year breakdown indicates the quantity of National Match Cal. .30 M1 rifles produced by Springfield Armory:

Year	*New*	*Rebuilt*	*Total*
1953	800		800
1954	4184	499	4683
1955	3003	314	3317
1956	5050	550	5600
1957	4184	499	4683
1958	1295	731	2026
1959	2877	2652	5529
1960		8663	8663
1961		1410	1410

5. The 1961 National Match Rifle is illustrated and described in fig. 1.

6. In an effort to arrive at criteria necessary to improve accuracy and dependability of National Match M1 Rifles, a conference was held at Springfield Armory on 26 thru 28 September, 1956 to outline an engineering program. The meeting was attended by the National Match Ordnance Officer; representatives of several services; Office, Chief of Ordnance; Headquarters, Ordnance Weapons Command; Raritan Arsenal; Frankford Arsenal; and Springfield Armory. Similar meetings are held annually. As a direct result funds were made available in January, 1957 to conduct an engineering program at the Springfield Armory relative to improving rifle accuracy.

PART II — AREAS INVESTIGATED

Figures 2 - 6 are drawings of the M1 Rifle, and may be helpful in understanding the following descriptions of areas investigated:

1. Figures 14 thru 17 illustrate the method used for glass bedding M1 National Match rifles at Springfield Armory. Materials required for glass bedding are commercially available employing an epoxy resin, milled fiberglass, polyamide resin and catalysts. Prior to using the above materials, it is imperative that a suitable release compound be applied to completely coat the metal components being glass bedded. That is to say portions that will be in contact with glass bedding material as it sets and hardens. The mold release compound facilitates the breaking away of metal parts thus leaving an exact molded impression of the metal components. In addition, a suitable solvent should be used for cleaning excess flash in the soft state prior to hardening and for sundry cleaning of equipment. It

has been found that the most suitable method for applying glass compound is by the use of a syringe type polyethelene applicator having an orifice of approximately 7/64 or 1/8 inch diameter, effecting a smooth constant extrusion of material into the routed stock channels.

Generally speaking the use of epoxies with suitable catalysts usually limits the pot life of the material. Therefore, only small amounts no greater than 1/4 pound batches should be mixed and used immediately since the setting time will be found to be less than one hour.

Whenever commercial products are used it is recommended that suppliers instructions be followed.

2. Work has been completed relative to providing rear sights with half-minute of angle windage adjustment. All National Match Rifles for 1961 will have special windage knobs and rear sight bases which provide half minute windage adjustments. Each part is appropriately identified with a marking "NM" 1/16 inch high.

3. BARREL STRAIGHTNESS:

Lack of barrel straightness has been found to be the major cause of targeting rejects at Springfield Armory, because the groups are too far off from the sight setting.

However, in relation to accuracy, or the ability of weapon to place shots consistently within a given area without regard to sight alignment barrel straightness is not as important.

The Armory has developed an optical instrument for determining straightness. This instrument, shown in figures 7 and 8 is capable of measuring straightness within .0002 slope units of angular movement or 42 seconds. As the mirrored plug is traversed through the barrel bore by the handwheel, the image of the reticle is reflected through the prism system to the screen of the instrument (E in figure 8). A schematic sketch of the optical system is shown in figure 9.

Each barrel is checked for straightness using this instrument. Requirements are that throughout the length, the image of the reticle shall remain within the grid shown in figure 8. This assures a barrel of very fine straightness.

4. BARREL BORE DIAMETER

Another development at the Armory is the use of air gages to accurately measure and control bore diameters of the National Match rifle. Such a gage is illustrated in figure 10. A constant flow of air passes through the gage and out of the orifices in the spindles. If the bore diameter is restricted, not much air escapes out of the orifices and the float rides higher in the air column. If the bore is large, there is more space over the orifices for air to escape and the pressure is lowered, allowing the float to drop. As the spindle is traversed through the barrel, readings may be made of the diameter at any point thus checking the uniformity of the barrel land and groove diameters from end to end. These air gages are extremely sensitive and permit measurements of diameters to an accuracy of .0001 inch variation.

Variations in bore diameter can result in velocity variations due to more or less gas escaping around the bullet or more or less friction. National Match barrels are held within .2995 + .002 (land) and .3075 + .002 inches (groove).

PART III — GENERAL REQUIREMENTS

1. All components shall be of the latest design.

2. All wooden components shall be of solid heartwood with the direction of grain parallel to longitudinal axis.

3. All stocks shall be glass bedded and custom fitted to Receiver and Barrel assemblies and trigger housing assemblies. The Stock assembly and the trigger housing assembly shall be identified with last four digits of the receiver serial number. These assemblies shall not be interchanged after glass bedding process has been completed.

4. The stock shall be free from contact with the barrel.

5. Longitudinally, the stock ferrule shall have approximately 1/16" clearance with the lower portion of lower band.

6. The stock shall have a clearance in the area between rear of receiver bedding surface and receiver rail bedding surfaces.

7. The stock shall be free of any contact with the rear hand guard.

8. The rear handguard may be free to move longitudinally. The front handguard shall be fastened permanently to the lower band.

9. Gas cylinder shall fit tightly on the barrel bearing diameter and the splines. There shall be no rotational movement.

10. Gas cylinder shall be brought forward against the lock before tightening the screw, gas cylinder lock.

11. In the assembly, the gas cylinder lock shall be hand tightened against shoulder on the barrel within a range of slightly beyond the 6 o'clock position but not in excess of 60 degrees (8 o'clock) past the 6 o'clock position. The gas cylinder lock shall then be "backed off" the minimum distance necessary to align with the gas cylinder at the 6 o'clock position.

12. The rear ring of gas cylinder shall be free of any contact with the barrel. Identification shall consist of the letters "NM" 1/16 inch high on bottom of the rear tang of gas cylinder.

13. The barrel shall be line straightened to meet the requirements of an Optical straightness gage. (see part II, Par. 3).

14. The barrel muzzle shall be crowned concentric with bore (60° included angle) to remove burrs.

15. Functional surfaces of the hooks of the hammer and trigger, and the related mating surfaces of the sear may have the phosphate coating removed by polishing to assure smooth trigger pull.

16. Front sight blade edges shall be sharp and well defined by selection only. Front Sight shall be assembled securely. Identification shall consist of the letters and numerals, "NM" — "062" 1/16 inch high inscribed on the right side.

17. Clamping of the trigger guard shall have a definite resistance at a minimum distance of 3/8 inch from the full lock position.

18. The operating rod assembly shall function freely without binding during a simulated firing cycle with the operating rod spring removed.

19. The trigger pull required to release the hammer shall be smooth, free from "Creep," and within the limits of four and one-half to six pounds.

20. Identification mark shall consist of the letters "NM" approximately 1/8 inch inscribed on the barrel approximately midway between the front hand guard and front sight.

21. In addition to the standard M1 rifle aperture with a peephole of .069 + .005, two apertures with special sized peepholes have been issued. These are identified by the markings near the peephole itself of "NM 520" (.0525 ± .0025) and "NM 595" (.0595 ± .0025) part numbers are 7268110 and 7268109 respectively.

22. Headspace shall be 1.940 to 1.943. Light finger pressure shall be used in checking headspace.

23. Threads on windage knob shall measure 5/16 - 64NS-3A. Threads on base rear sight shall measure 5/16 - 64NS-3B. Identification mark shall consist of the letters "NM" 1/16 inch high inscribed on the right side of each part.

24. TB Ord 366, dated 15 Sep 53, rebuild standards for small arms materiel, shall apply insofar as requirements are not in conflict with those provided herein.

PART IV — INSPECTION

1. PROOF FIRING

a. Each barrel is subjected to proof firing prior to assembly to the rifle receiver. The barrel shall withstand the firing of one high pressure test cartridge (approximately 70,000 pounds per square inch) without evidence of failure as determined by magnetic particle inspection.

b. Each completed weapon is proof fired with one round of high pressure test ammunition. After firing the weapon shall be carefully inspected for evidence of failure. The spent proof-cartridge case is closely examined for bulges, splits, rings or any evidence of other defects. Any defects found will be cause for rejection of the rifle.

c. Immediately after proof firing the prescribed proof marks shall be placed on each acceptable barrel, bolt, stock and receiver.

2. FUNCTION FIRING

a. Prior to targeting and accuracy tests, the rifle is fired 24 rounds for functioning. If malfunctions occur, the rifle is rejected.

b. During the firing of accuracy and targeting tests (32 rounds), all weapons must function satisfactorily. If malfunctions occur, the rifle is rejected.

3. TARGETING TEST

a. The purpose of the targeting test is to insure that the center of impact of a group fired from the rifle can be centered on the target with adequate adjustments remaining in elevation and windage.

b. At a range of 100 yards with the rear sight at 8 clicks up from its lowest position and the windage scale at zero, the sights aligned at 6 o'clock on a 5.0 inch bull's eye two shots are fired. If these shots fall right or left of the center of the bull in excess of 5.8 inches, the front sight will be adjusted to bring the shots within limitations.

c. Targeting information is obtained simultaneously with accuracy firing (paragraph 5). These accuracy test groups must fall within a rectangle 11.6 inches horizontal by 17.6 inches vertical concentrically centered on the bull's eye.

d. Any rifle not meeting the above requirements is rejected.

4. ACCURACY MOUNT

The pneumatic mount shown in figs. 11 and 12 is used by the Armory as the standard machine rest to target and accuracy check all production National Match rifles. In this firing fixture, the weapon is positioned on a cushion locator at the rear bottom of stock and on a V-Block near front end of stock to the rear of sling swivel. Two steel jaws, lined with rubber cushions are pneumatically operated to rigidly clamp and hold the weapon in position for firing. The weapon recoils in firing fixture, under spring tension, and returns to its original position ready to fire the next round.

Each day prior to targeting and accuracy firing of National Match rifles, a control rifle of known accuracy is fired 3 ten-shot targets from the firing fixture, to compare the average extreme spread of those three targets with the known basic accuracy of the control rifle. Any increase in average extreme spread is cause for re-adjustment of firing fixture.

5. ACCURACY FIRING

With the rifle supported in a machine rest three ten-shot groups are fired at 100 yards for accuracy using match quality ammunition. The average extreme spread of these groups can not exceed 3.5 inches. Any one ten-shot group making up this average cannot exceed 5.0 inches extreme spread. If these requirments are not met the rifle is rejected.

PART V — AREAS UNDER INVESTIGATION

1. Modification of rear sight which will provide elevating adjustments in half-minute increments.

a. Prototype samples have been tested and one design showing promise is currently being evaluated. This new design aperture assembly which provides a simple means of obtaining ½ minute of angle elevation adjustment is shown in figure 18.

2. Engineering of the National Match Rifle is a continuing program. Engineering studies will be concentrated in areas from which direct tangible benefits can be derived relative to providing a quality weapon for marksmanship shooting.

3. In order to retain the technical data required to reproduce the quality necessary in National Match M1 Rifles, firm proven requirements will be incorporated into Ordnance drawings, specifications and other documents as the refinements are proved.

4. Improvements and experience resulting from this program have application to improvement of accuracy in future "NM" weapons.

PART VI — NOTES OF INTEREST

1. This article is intended to afford the reader with a general knowledge concerning timing values of Rifle, U.S. Cal. .30, M1 as related to the action of the bolt and operating rod. In this presentation, the timing figures are averages obtained from special tests of a number of weapons. The reader should not misconstrue this information to mean that each rifle will have the same timing characteristics or that rifles will not function satisfactorily if slightly faster or slower than the average given.

From the precise moment the firing pin contacts the cartridge primer, the following occurs:

Projectile passes gas port	1.31 milliseconds
Projectile clears muzzle	1.36 milliseconds
Operating Rod recoil starts	1.58 milliseconds
End of operating rod dwell	2.89 milliseconds
End of Bolt unlocking	4.07 milliseconds

NOTE: The preceding timing data was recorded during the firing of standard Cal. .30 M2 AP 168 grain ammunition. The mean average muzzle velocity of

this ammunition was 2735 ft./sec at 53 ft. from muzzle. The bullet was approximately 7.2 inches forward of the muzzle when the recoil of the operating rod started.

Once the Operating Rod starts to move, it completes the recoil portion of the firing cycle in approximately 19.4 milliseconds. The Counter-recoil action which locks the bolt into battery is completed in approximately 43.8 milliseconds.

2. The M1 type cartridge T291 Match (similar to the old M1 ball) used in 1958 National Matches has been officially designated, "Cartridge Cal. .30 Match M72." This ammunition will be made available to shooters competing in 1961 National Matches.

3. The M1 rifle was designed, developed and satisfactorily tested with M1 ammunition. Its main combat ammunition has been the Armor Piercing cartridge with 168 grain bullet at nearly 2800 feet per second, muzzle velocity. The main training round has been the M2 ball with 150 grain bullet at 2800 feet per second.

4. As compared to accuracy acceptance requirements of National Match Rifles (par 5, under accuracy firing), the standard M1 rifle is fired five consecutive shots at 100 yards. These shots must group within a 5.6 inch circle.

5. All test firing of National Match Rifles prepared by the Armory is accomplished with the type and quality ammunition that is authorized for use by competitors at the National Matches.

6. Extreme care must be exercised by individuals when attempting to assemble rear sights with the new windage knob and rear sight base designed for half-minute windage adjustment. Both the windage knob and rear sight base have a fine pitch thread. Because of the precision made threads, particular attention should be given the following, prior to, and during assembly:

a. Mating threads should be free of excess oil and all foreign matter.

b. Caution should be exercised in starting windage knob threads into rear sight base to preclude danger of crossing threads.

7. Figure 13 shows an exploded view of the rear sight components. Assembly of rear sight parts is prescribed as follows:

a. Insert rear sight base through the opening of the cover.

b. Place the front lip of cover into the recess at forward portion of rear sight receiver well. Raise the base slightly, exposing the rear portion of the cover. With a screwdriver, apply pressure to rear of cover in a horizontal direction until the cover snaps into place and is firmly retained by the receiver.

c. Insert the aperture into the aperture groove in the base and lower until it bottoms against the receiver.

d. With the left hand, apply pressure to the base forward and to the right of the receiver. Insert and turn windage knob carefully to engage the mating threads. Continue to turn windage knob until the base is tightly seated against the right receiver ear.

e. Insert pinion elevating assembly through the hole on left side of receiver ear, meshing the pinion teeth with mating teeth of the aperture. Simultaneously align by feel, the flat at the end of pinion shaft with mating contour of the lock, housed in the windage knob. Thread the rear sight nut (in the windage knob) onto the pinion shaft. (Some manipulation of parts may be necessary to permit assembly). Tighten rear sight nut until both elevating and windage knobs become inoperative. By backing off the rear sight nut one or more clicks (one-half turn per click) both knobs will then be operative. The graduation mark on rear sight base can be aligned with graduation mark on the receiver.

f. Tighten the rear sight screw securely. Settings of various ranges are attained in terms of the number of clicks from the lowest position of the aperture once the sight has been "zeroed" in at the respective ranges.

PART VII CARTRIDGE, CALIBER .30, M72 BALL (MATCH)

HISTORICAL DATA

1. When the Model 1903 Springfield Rifle was released by the Ordnance Corps to the U. S. Armed Services, it was chambered for a 220 grain cupro nickel round nose bullet, and a rimless cartridge case. This cartridge developed 2200 ft. per second velocity and produced good accuracy at long range. In 1906, the

bullet was changed to a pointed, Spitzer type weighing 150 grains, and being much shorter in length, did not require the long neck of the '03 case. Accordingly, all rifles were rechambered to the new case design, which became known as the 1906 cartridge. The new case was approximately 1/10" shorter (length of neck), than the original 1903 case. Thus, the Springfield rifle still continues to be known as Model 1903, whereas the cartridge became known as the .30, Model 1906. As is the custom of major commercial arms and ammunition manufacturers, many rifles were designed chambered for the Caliber .30-03 cartridge. When the case and bullet change was made in 1906, they too followed to keep abreast with the latest armed service ammunition and correctly named the new cartridge "30-06". This cartridge developed 2700 ft. per second velocity, the highest in the Western Hemisphere. However, this change resulted from German developments, i.e., the 8mm cartridge, with its 154 grain Spitzer bullet, also at 2700 ft. per second velocity. Thus, the U. S. cartridge, Model of '06, as well as the '03 rifle, have both been designed from the basic 1898 Mauser rifle and cartridge, probably the most widely used rifle and ammunition combination in the world at that time.

2. Because of the increased velocity and lighter recoil, the cartridge was popular with both military and civilian marksmen. However, metal fouling in rifle barrels, heretofore, relatively insignificant, became a serious problem. Probably many old timers can recall the barrel "doping" and vigorous brass brushing practices followed to remove the lumpy cupro nickel fouling, deposited in the bore by the jacket of the bullet.

3. Without too many new records established, World War I cancelled development of an improved bullet. During this conflict, the U. S. Forces noted that the French machine guns and rifles could outrange U. S. weapons by several hundred yards. The 8mm cartridge used by the French Forces contained a long solid bronze bullet, "Streamlined" in design, and was known as the ball "D", a boattail type heretofore not used in military conflicts. Metal fouling was unknown and accuracy exceptionally good. In 1919-21, experimental bullets were made at Frankford Arsenal in heavier weights (180 grain) and of various jacket materials, including one known as the "Tin Can" bullet. In 1922 work began on a bullet jacket, 6° boattail in design, utilizing a non-fouling jacket of 90% copper, 10% zinc, known as Gilding Metal. The lead core was an alloy of approximately 90% lead, 10% antimony, resulting in high sectional density. Bullet weight was 172 grains.

4. This bullet was an immediate success. However, further tests revealed that a 9° boattail stripped easier from tooling, in addition to a slight improvement in retaining velocity at 600 and 1000 yard ranges. In 1924, this cartridge made an enviable record at the long ranges due to its good wind bucking quality. In 1925, possibly due to improved skills and machine assembly techniques, a record year in accuracy making was reached. 6" to 7" groups at 600 yards were normal performance. This cartridge was adopted by the armed services as a service round of ammunition, with the bullet and primer crimped into the case for rifle and machine gun use. It became known as the M/1 Cartridge, Caliber .30 Ball. The propellant was IMR 1185, and the primer was a chlorate FA26 type.

5. Especially accurate lots of Caliber .30 Ball, M/1 ammunition were set aside each year for the National Matches at Camp Perry, Ohio, continuing until 1941, when the match program was interrupted by World War II.

6. The use of the M/1 rifle in 1940 practically obsoleted the 1903 rifle, and with ammunition in large quantities required for the war effort, the M/1 cartridge was discontinued. The original Caliber .30 ball cartridge, model of 1906, was again manufactured, utilizing a gilding metal jacket. This cartridge was identified as Caliber .30 Ball M/2.

7. Upon reinstatement of the National Matches in 1953, selected stocks of service Caliber .30 Ball M2 ammunition having relatively good accuracy (4.5 inch mean radius over a 600 yard range) were reserved and used in the 1953, 1954, 1955, and 1956 matches. However, it was immediately recognized that this service ammunition was not sufficiently accurate to match the marksmanship potentialities of the National Match competitors. As a result, a program was initiated at Frankford Arsenial in 1956 to develop a suitable match cartridge. The initial targets of this program were set to revive the dormant manufacturing techniques of the Caliber .30 National Match cartridge and to mass produce sufficient, suitable ammunition for the 1957 National Matches. This was required to produce ammunition having a consistent reproducible accuracy of 3.5 inch mean radius over a 600 yard range. By means of close cooperation between all personnel in the design and modifications of production equipment and tools, selection of materials and

quality control over manufacture of the bullets and loading of the cartridges, ammunition of considerable superiority over the selected service type was realized for the 1957 Matches. This year introduced a change in the headstamp from "N.M." to "MATCH" and marked the start of continuous production of consecutive lots of match ammunition, available for match shooting 'round the world.

8. Continuing studies of material, tooling and machinery variables and ballistic tests of innumerable modifications of the primer, bullet and/or complete round have resulted in further improvements in the ballistics of this cartridge which has been officially designated as "Cartridge, Caliber .30 Match M72." Figure 19.

RECENT & CURRENT STATUS

1. The present 1961, M72 Caliber .30 Match Cartridge differs visually from the (M1) only in that staking of primer in cartridge case is no longer required and the cannelure is omitted on the bullet. A charge of approximately 48.5 grains IMR No. 4895 propellant in conjunction with an improved styphnate (less errosive-corrosive) military primer drives the bullet at a velocity of 2640 f.s.

2. Close coordination between Frankford Arsenal and Springfield Armory and other agencies in the mating of this cartridge to the Caliber .30 National Match M1 Rifle also has had a definite effect upon the overall improvement of this cartridge.

3. Frankford Arsenal, now in its fifth year of production of the M72 match cartridge, will have produced an average of 16 million rounds per year. This years' production totalled approximately 18 million rounds 1.8 million of which were earmarked for the Camp Perry Matches. Inspectors select a homogenous sample of 60 bullets from every 4-hour run of each bullet assembly machine. These bullets are assembled as cartridges, assigned a control number, and submitted for the accuracy test, which is fired in each of three (3) proof weapons. A spread of at least 1,000 rounds between each of these weapons is maintained to give an accurate evaluation of the performance of the bullets in weapons of various rounds life. Results of this test are reported within a 6-hour period. The maximum mean radius quality assurance limit is fixed at 1.5" at 300 yards. This limit is necessary to assure that the ammunition will meet a final acceptance average mean radii limit of 3.5" at 600 yards.

STUDIES TO DETERMINE ACCURACY

1. Probably the major portion of competitive rifle shooters make many tests to evaluate ammunition. Many believe that certain propellants are better than others, even to the point that raising or lowering a normal charge increases accuracy qualities in a particular rifle. In fact many shooters believe that each rifle must be fitted to a certain load. In military calibers thousands upon thousands of tests clearly indicate that when a bullet is really consistently accurate, it will shoot and reproduce its accuracy in various rifle barrels and with most any propellant. This fact has been established after 100 years of bullet fabrication at the Frankford Arsenal in the manufacture of billions of military and experimental type bullets. A side issue of bullet wear in barrels in its relation to accuracy has also been determined, i.e. that normally until a cal. .30 barrel has been fired 2000 rounds its peak accuracy has not been reached — and improvement continues until 4000-6000 rounds. After which accuracy may drop — time interval between shots 30 to 60 seconds.

2. PROPELLANTS: Tests have been made to determine if propellants affect accuracy and if velocity has a factor in accuracy. An unusually accurate lot of 173 grains boattail Cal. .30 bullets were used in this study to eliminate "bullet variables." In previous tests this lot shot into 2.5" extreme spread at 300 yards, 3 ten shot targets.

Propellants tested were: IMR No. 4350, 4320, 4895 and Hi-Vel. The charges varied from 36.7 grains of Hi-Vel to 46.5 grains No. 4350. Since position of propellant does affect accuracy (greater air space — greater variables) extreme care was used in chambering cartridges to eliminate shifting of propellant. Velocity selected was 2300 because former tests indicated peak accuracy could be obtained at that level. Sixty rounds were fired at 300 yards with each load, instead of the usual 30 shots. 10 rounds constituted one target. No 5 shot targets are made since they are entirely too unpredictable. Each propellant had equal "warmers" or fouling shots. When the results were averaged, no significant advantage could be found. So, after 240 rounds of firing no one propellant was superior. If, however military shooters desire maximum accuracy at long range — zero air space is an advantage if pressures are not overlooked. Velocities can vary 100 fs. at 2700 ft. level with some propellants depending whether the propellant is at bullet or primer end.

3. BULLETS: Tests made with military Caliber .30 ball boattail 173 grain bullets at 300 yards have proven conclusively that the effect of a one-grain weight differential on center of impact is zero. What is important is *uniformity* in *bullets*. Consistently accurate bullets cannot be predicted in manufacture, though some types are inherently more accurate than others. To obtain peak accuracy in bullet making requires more than straight walls in jackets, perfect assembly, perfect basing, and perfect concentricity. (Even gray hairs are not enough as many young operators soon "gray" on this job). Samples of bullets are selected daily from each bullet assembly machine and tests are constantly being made to evaluate accuracy which are again repeated as a cartridge, if the bullets pass the original match accuracy requirement. Firing tests, 30 shots, (3-10 shot targets) are the only positive means of evaluating quality. The variables are so small that neither gaging nor spinning will predict accuracy. All bullets are visually inspected in order to remove those bullets with surface imperfections (cuts, scratches, dents, etc.) as well as imperfect bases which will produce inaccuracy.

PRIMERS

Most every old shooter remembers the FA 26 primer — how reliable it was. He also remembers how much corrosion it produced in his weapon. Unless water was used to dissolve the chlorate salts — or at least 3 cleanings, rust could and did appear often ruining a fine barrel. Recently, military tests proved that while the early non-corrosive, non-mercuric type primers (styphnate) were not as uniform in ignition as the chlorate primer, improvements in priming mixture has corrected earlier weaknesses.

In 1954 ballistic tests, in which 400 shots were fired for accuracy, in comparing chlorate vs styphnate primers — indicate that the present non-corrosive non-mercuric type is not only suitable for military purposes, but were accurate within .05" at 300 yards of chlorate results. Since that time further improvements have proven conclusively that the new primer is consistent and of high quality.

CASES

The 1961 F.A. match case is especially made for the national matches, as is the bullet. Case walls are held to within .001 inch although tests didn't substantiate related accuracy values. More important are the draw tools to control cubic material value. Carbide dies are used and the punches are held to .0002" tolerance. Close gaging indicates when the punch has worn and it is subsequently discontinued thus resulting in a very uniform case. The head area is formed twice to insure high hardness and the primer pocket is tightened .0005" less than military ammunition. Thus the shooter is provided with the best case he ever shot. This type case has been in use since 1958. Vent holes are punched using an automatic centering fixture, a guarantee of concentricity.

VELOCITY

In a military cartridge the most important part is the bullet. It must be accurate as well as having power to do its job. Originally the M72 was a service round and tests in those days indicated that 2700 F.S. was correct for: range, accuracy, penetration and not being too severe in the weapon or on the soldier. Velocities of 2775 were tried but found too severe for rapid fire shooting. With the advent of the M/1 rifle, further tests pointed out that 2640 F.S. velocity to be ideal for the same purposes, considering design of the M/1 rifle. This velocity has been used for the M/72 cartridge, establishing many new records at long ranges and its suitability for national match use.

MEASUREMENT OF ACCURACY

Mean radius is the system used to evaluate military ammunition and is the best method to measure a series of shots. To the target shooter it requires too much detail to plot each bullet from a located impact center. A good rule of the thumb conversion, from M.R. to extreme spread is to multiply M.F. times 3.14 (π).

The 1961 national match ammunition must average LESS than 3.5" M.R. at 600 yards. Actually the average is nearer 3.0" than 3.5".

ALL WOODEN COMPONENTS SHALL BE SOLID HEARTWOOD WITH THE DIRECTION OF GRAIN PARALLEL TO THE LONGITUDINAL AXIS.

STOCKS SHALL BE HEAVY IN WEIGHT.

STOCK SHALL HAVE NO OPEN GRAIN WHICH MIGHT SWELL EXCESSIVELY IN HIGH HUMIDITY.

PROTECTIVE FINISH TUNG (CHINAWOOD) OIL.

REAR SIGHT MARKINGS MUST BE DISTINCT.

KNOBS MUST HAVE FREE MOVEMENT, INDEPENDENT OF EACH OTHER, DEFINITE CLICKING ACTION; AND POSITIVE RETENTION.

ELEVATING KNOB MUST BE ON 100 YD SETTING WHEN APERTURE IS ELEVATED 8 CLICKS FROM LOWEST POSITION.

SIGHT MUST BE FREE OF EXCESS OIL.

IN ADDITION TO THE STANDARD MI RIFLE APERTURE WITH A PEEPHOLE OF .069±.005, TWO APERTURES WITH SPECIAL SIZED PEEPHOLES HAVE BEEN ISSUED. THESE ARE IDENTIFIED BY THE MARKINGS NEAR THE PEEP-HOLE ITSELF OF "NM 520" AND "NM 595"; PART NUMBERS ARE 7268110 AND 7268109 RESPECTIVELY.

SCREW, REAR SIGHT SHALL BE TIGHTENED WITHIN 20 TO 25 INCH LBS.

ALL BARRELS SHALL BE LINE STRAIGHTENED TO MEET THE REQUIREMENTS OF OPTICAL STRAIGHTNESS GAGE (F7319275)

THE BARREL MUZZLE SHALL BE CROWNED CONCENTRIC WITH BORE (60° INCLUDED ANGLE)

FROM THE BARREL CENTERLINE, ESTABLISHED BY A SELF ALIGNING EXPANSION PLUG (2 1/2 INCHES LONG WITH A PILOT DIA. OF .2993-.0001) THAT FITS AND ALIGNS ITSELF IN THE BORE AT THE MUZZLE END, THE MAXIMUM ALLOWABLE DEVIATION FROM THAT CENTERLINE SHALL NOT EXCEED 0°2' 23" THROUGHOUT THE LENGTH OF THE BORE.

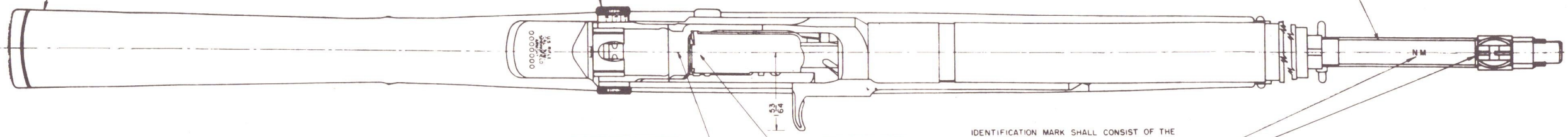

PRICK PUNCH RECEIVER AFTER PROOF FIRING

PRICK PUNCH BOLT AFTER PROOF FIRING.

IDENTIFICATION MARK SHALL CONSIST OF THE LETTERS "NM" APPROXIMATELY 1/8 INCH INSCRIBED ON THE BARREL APPROXIMATELY MIDWAY BETWEEN THE FRONT HAND GUARD AND FRONT SIGHT.

TOP OF FRONT SIGHT BLADE SHALL BE SQUARE WITH SIDE AND ALL EDGES AND CORNERS SHALL BE SHARP TO .005R MAX.

BLADE EDGES SHALL BE SHARP AND WELL DEFINED BY SELECTION ONLY. FRONT SIGHT SHALL BE ASSEMBLED SECURELY AND NOT OVERHANG GAS CYLINDER.

IN ADDITION TO STANDARD MI RIFLE FRONT SIGHT BLADE THICKNESS OF .084-.010, ANOTHER SIGHT WITH BLADE THICKNESS OF .065-.005 IS AVAILABLE. THIS IS IDENTIFIED BY A MARKING ON THE RIGHT SIDE "NM.062"; PART NO 7268365

43 9/16

AREA "A"

WITH THE OPERATING ROD SPRING AND ROD FOLLOWER DISASSEMBLED FROM THE RIFLE AND BY LIFTING THE ASSEMBLED RIFLE TO AN APPROXIMATE 60° ANGLE WITH THE MUZZLE UP, THE BOLT SHALL OPEN FULLY WITHOUT ANY MANUAL ASSISTANCE. NEXT, POINT THE MUZZLE DOWN ON AN ANGLE OF APPROXIMATELY 60°. THE BOLT SHALL CLOSE FULLY WITHOUT ANY MANUAL ASSISTANCE. WITH THE TRIGGER HOUSING AND STOCK DISASSEMBLED FROM THE RIFLE AND THE OPERATING ROD FULLY RETRACTED, APPLY A LIGHT PRESSURE TO THE HANDLE OF THE ROD INWARDS AT AREA "A". TENSION IN THE ROD MUST TEND TO RELOCATE THE ROD IN ITS ORIGINAL POSITION. THE VISIBLE OPENING BETWEEN THE RECEIVER AND THE HANDLE OF THE ROD IN THIS HORIZONTAL PLANE SHOULD NOT EXCEED .030 AND SHOULD GRADUALLY DECREASE BETWEEN THE POINT WHERE PRESSURE IS APPLIED AND THE ROD DISASSEMBLY SLOT ON THE RECEIVER. NEXT, APPLY PRESSURE DOWN-WARDS ON THE ROD TOWARD THE RECEIVER RAIL IN THE SAME LOCATION AS ABOVE. THE TENSION IN THE ROD MUST RELOCATE THE ROD IN ITS ORIGINAL POSITION. THE VISIBLE OPENING BETWEEN THE ROD AND THE RAIL IN THIS VERTICAL PLANE SHALL NOT EXCEED .015 AND SHOULD GRADUALLY DECREASE BETWEEN THIS POINT WHERE PRESSURE IS APPLIED AND THE ROD DISASSEMBLY SLOT ON THE RECEIVER.

IN ASSEMBLY, THE GAS CYLINDER LOCK SHALL BE HAND TIGHTENED AGAINST SHOULDER ON THE BARREL WITHIN A RANGE OF SLIGHTLY BEYOND THE 6 O'CLOCK POSITION BUT NOT IN EXCESS OF 60° (8 O'CLOCK) PAST THE 6 O'CLOCK POSITION. THE GAS CYLINDER LOCK SHALL THEN BE "BACKED OFF" THE MINIMUM DISTANCE NECESSARY TO ALIGN WITH THE GAS CYLINDER AT THE 6 O'CLOCK POSITION.

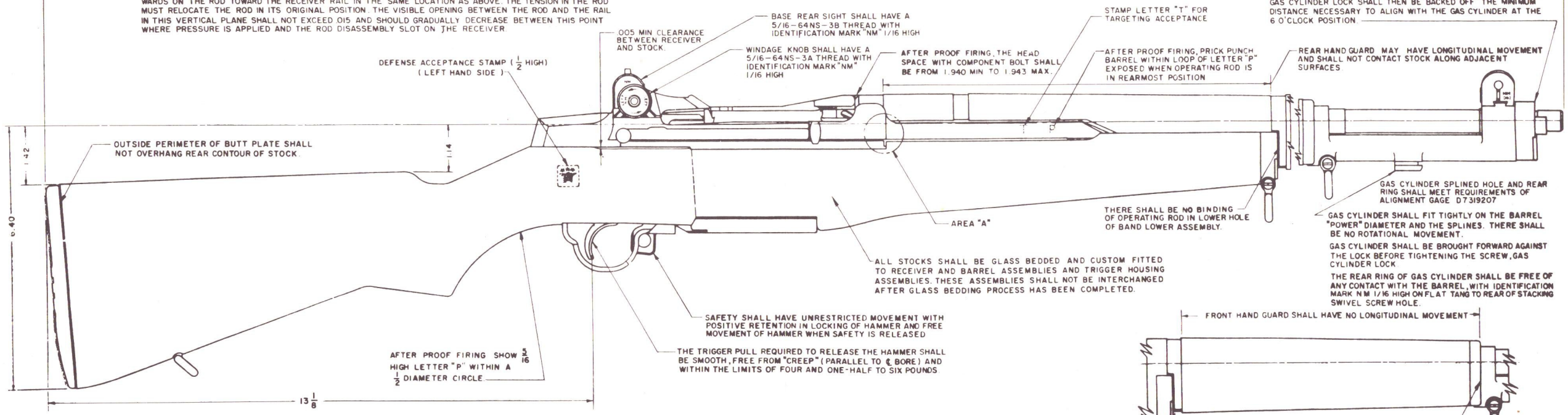

RIFLE, U.S. CAL .30, MI, NATIONAL MATCH

FIG. 1

SPRINGFIELD ARMORY

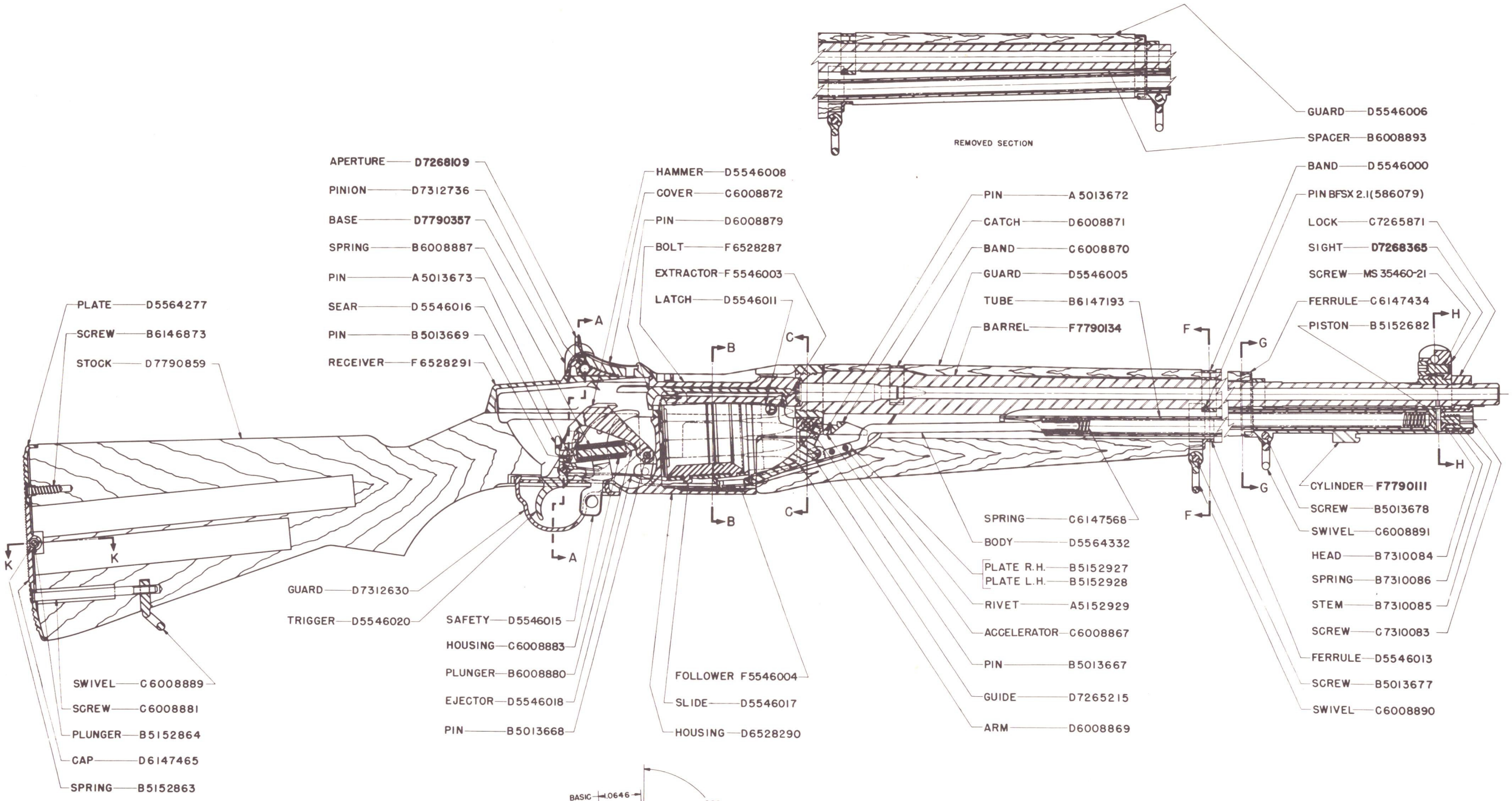

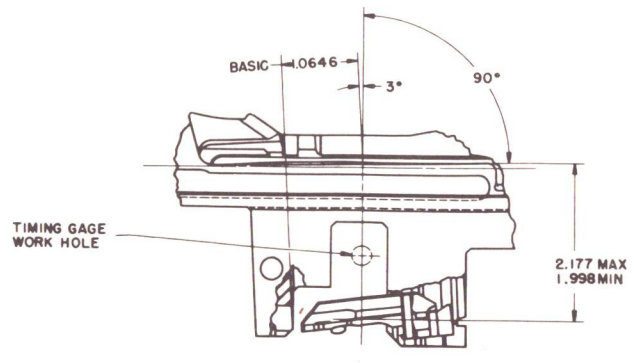

POSITION OF FOLLOWER WHEN LOADED CLIP IS ENGAGED FOR FIRING

FIG. 2

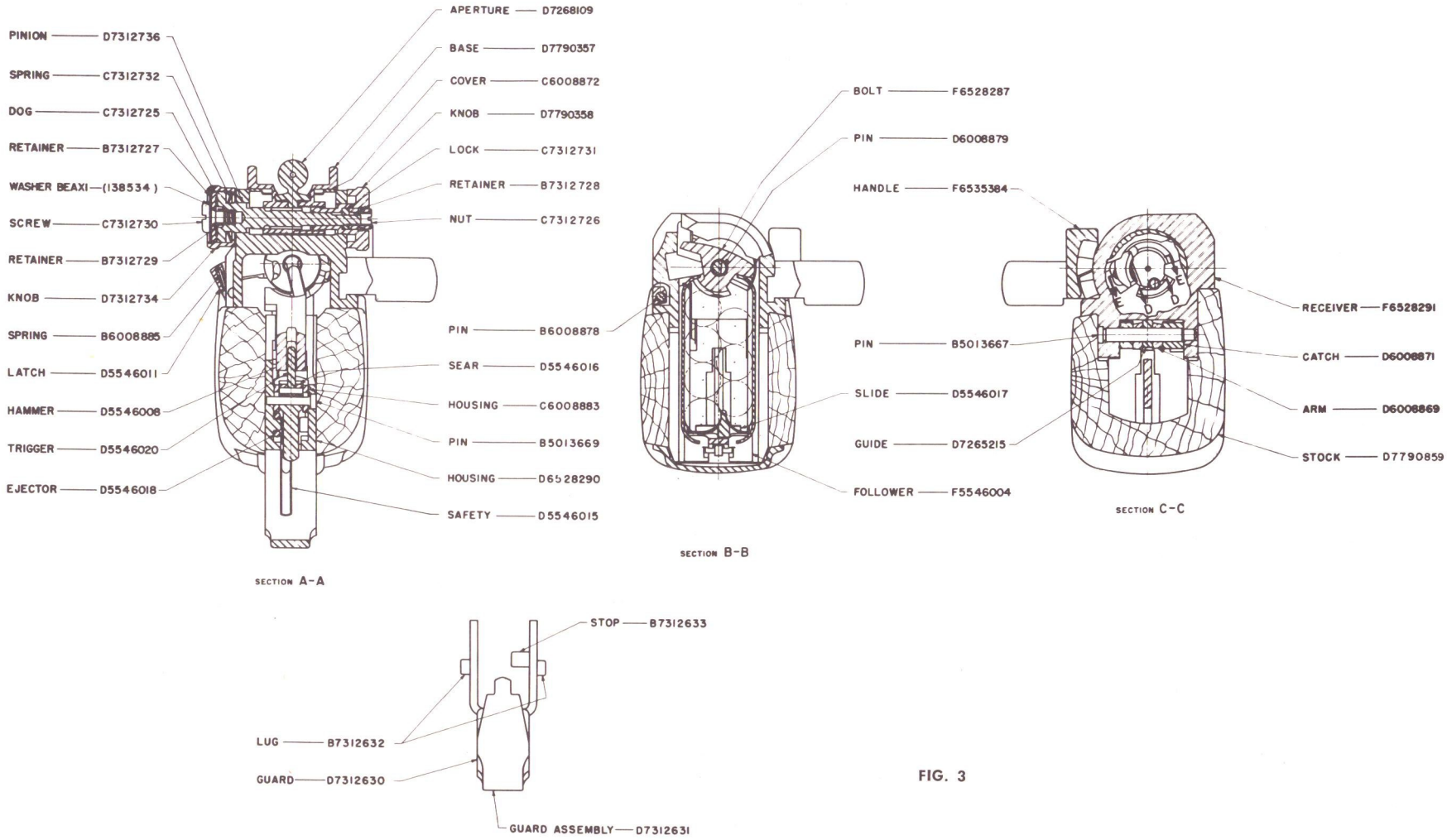
PINION — D7312736
SPRING — C7312732
DOG — C7312725
RETAINER — B7312727
WASHER BEAXI — (138534)
SCREW — C7312730
RETAINER — B7312729
KNOB — D7312734
SPRING — B6008885
LATCH — D5546011
HAMMER — D5546008
TRIGGER — D5546020
EJECTOR — D5546018
APERTURE — D7268109
BASE — D7790357
COVER — C6008872
KNOB — D7790358
LOCK — C7312731
RETAINER — B7312728
NUT — C7312726
PIN — B6008878
SEAR — D5546016
HOUSING — C6008883
PIN — B5013669
HOUSING — D6528290
SAFETY — D5546015
SECTION A-A
BOLT — F6528287
PIN — D6008879
HANDLE — F6535384
PIN — B5013667
SLIDE — D5546017
GUIDE — D7265215
FOLLOWER — F5546004
SECTION B-B
RECEIVER — F6528291
CATCH — D6008871
ARM — D6008869
STOCK — D7790859
SECTION C-C
STOP — B7312633
LUG — B7312632
GUARD — D7312630
GUARD ASSEMBLY — D7312631

FIG. 3

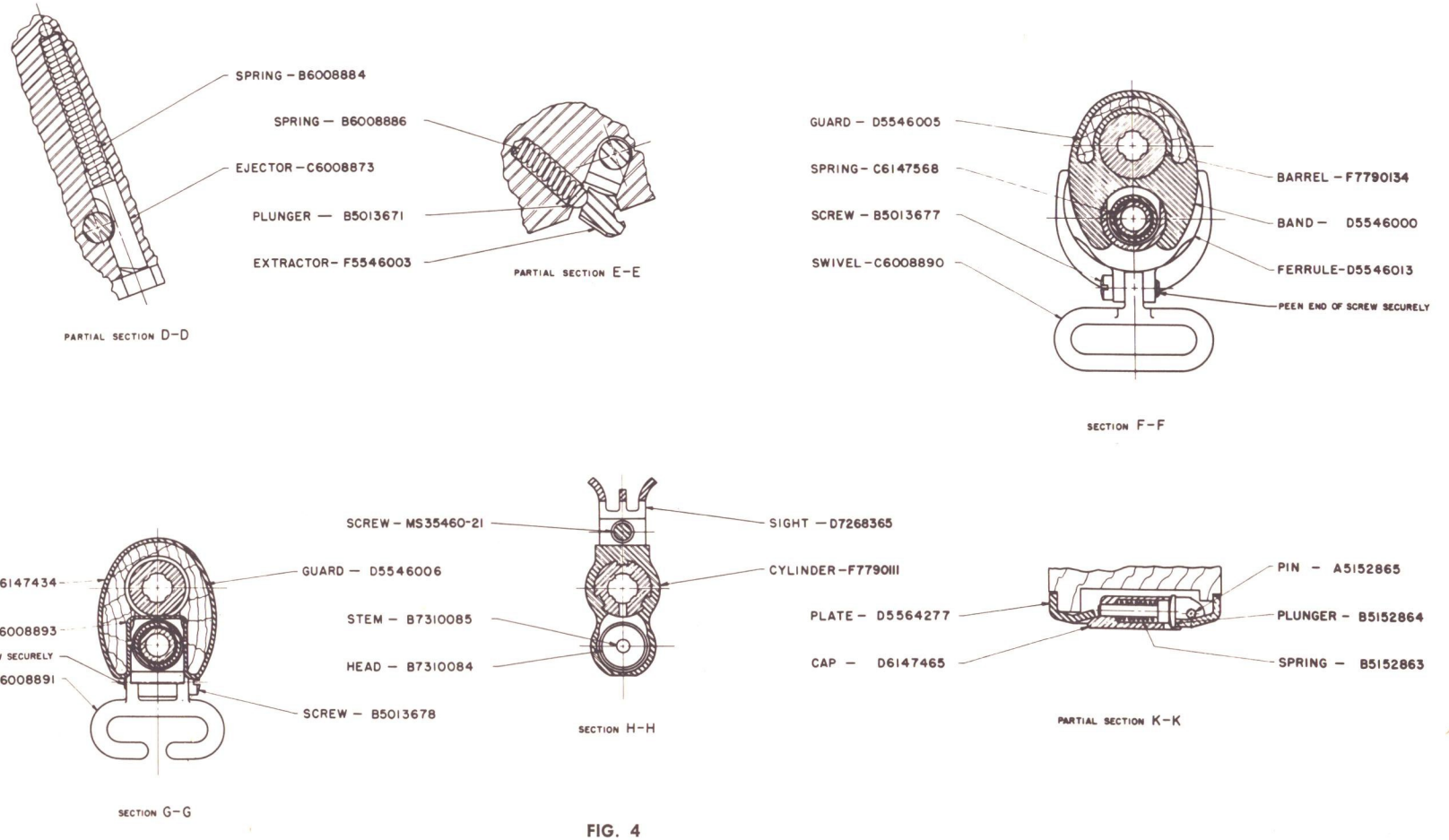
SPRING – B6008884
SPRING – B6008886
EJECTOR – C6008873
PLUNGER – B5013671
EXTRACTOR – F5546003
PARTIAL SECTION D–D
PARTIAL SECTION E–E
GUARD – D5546005
SPRING – C6147568
SCREW – B5013677
SWIVEL – C6008890
BARREL – F7790134
BAND – D5546000
FERRULE – D5546013
PEEN END OF SCREW SECURELY
SECTION F–F
FERRULE – C6147434
SPACER – B6008893
PEEN END OF SCREW SECURELY
SWIVEL – C6008891
GUARD – D5546006
SCREW – B5013678
SECTION G–G
SCREW – MS35460-21
STEM – B7310085
HEAD – B7310084
SIGHT – D7268365
CYLINDER – F7790111
SECTION H–H
PLATE – D5564277
CAP – D6147465
PIN – A5152865
PLUNGER – B5152864
SPRING – B5152863
PARTIAL SECTION K–K

FIG. 4

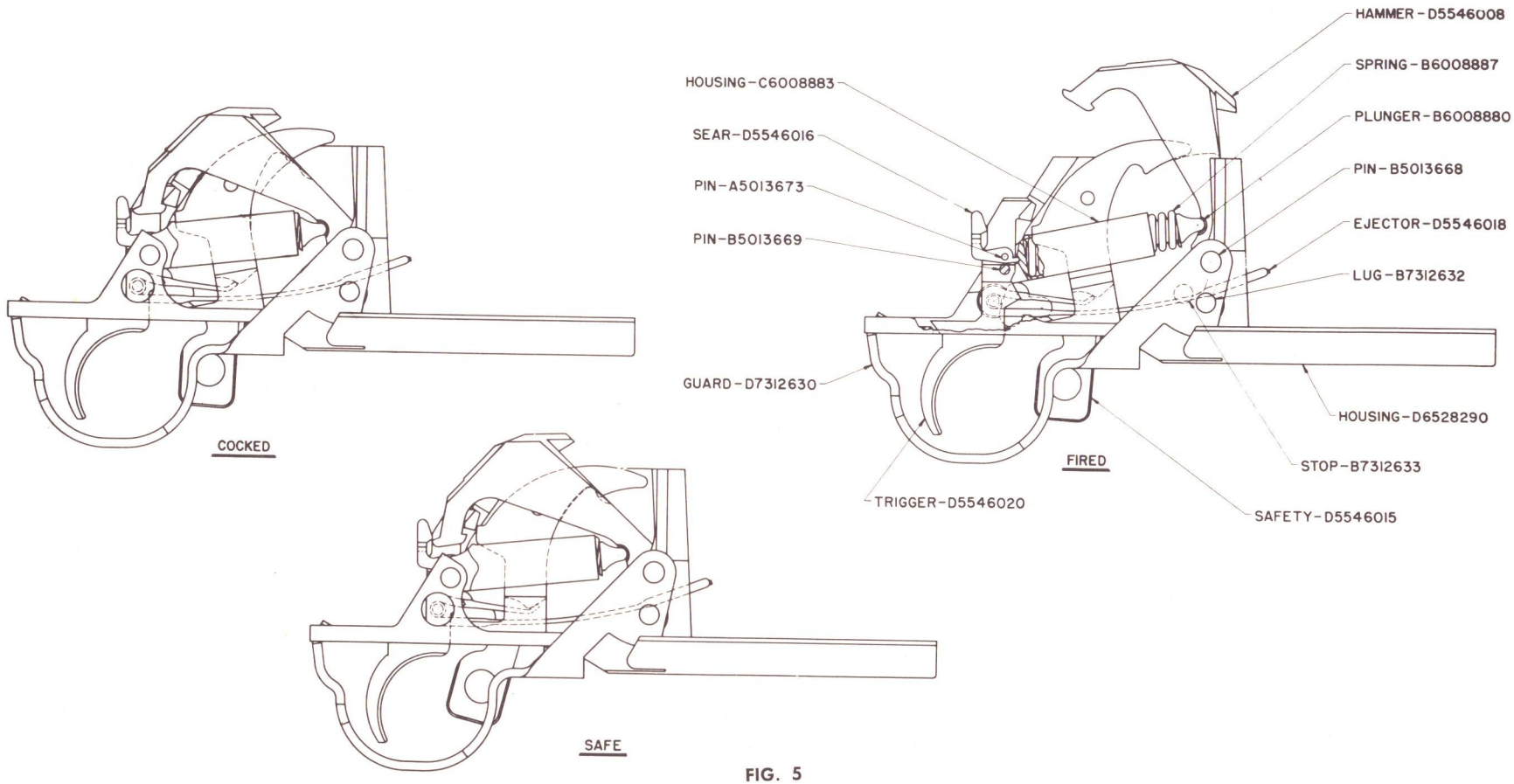
HAMMER - D5546008
SPRING - B6008887
PLUNGER - B6008880
PIN - B5013668
EJECTOR - D5546018
LUG - B7312632
HOUSING - C6008883
SEAR - D5546016
PIN - A5013673
PIN - B5013669
GUARD - D7312630
HOUSING - D6528290
STOP - B7312633
SAFETY - D5546015
TRIGGER - D5546020
FIRED
COCKED
SAFE

FIG. 5

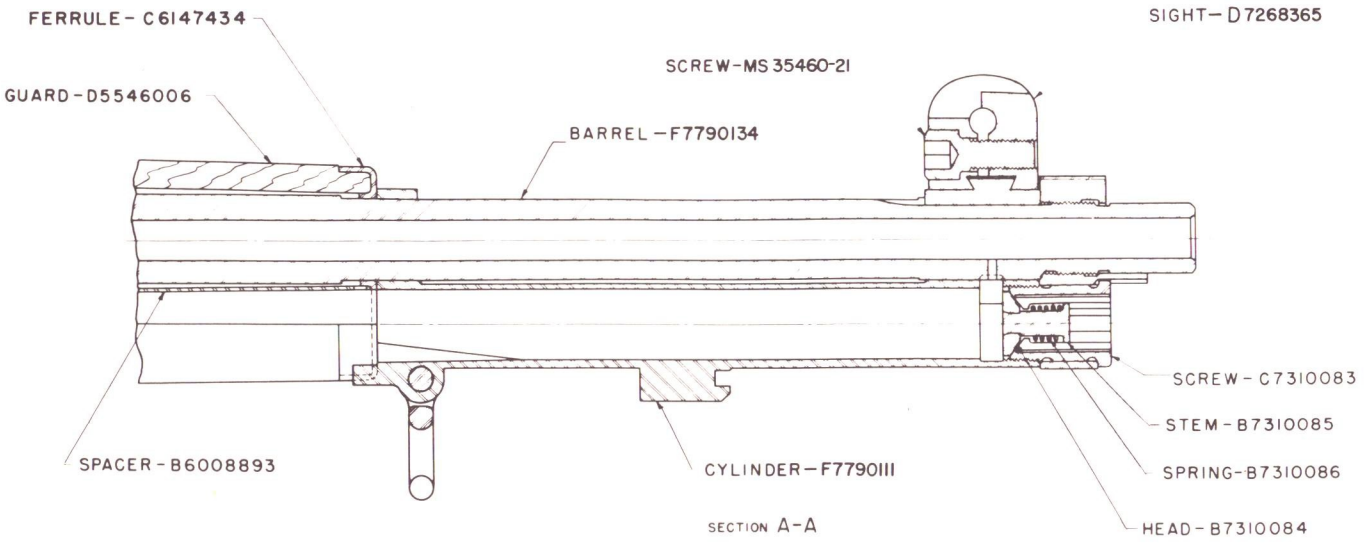

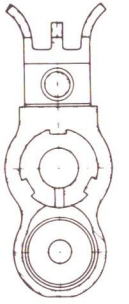

SECTION B-B

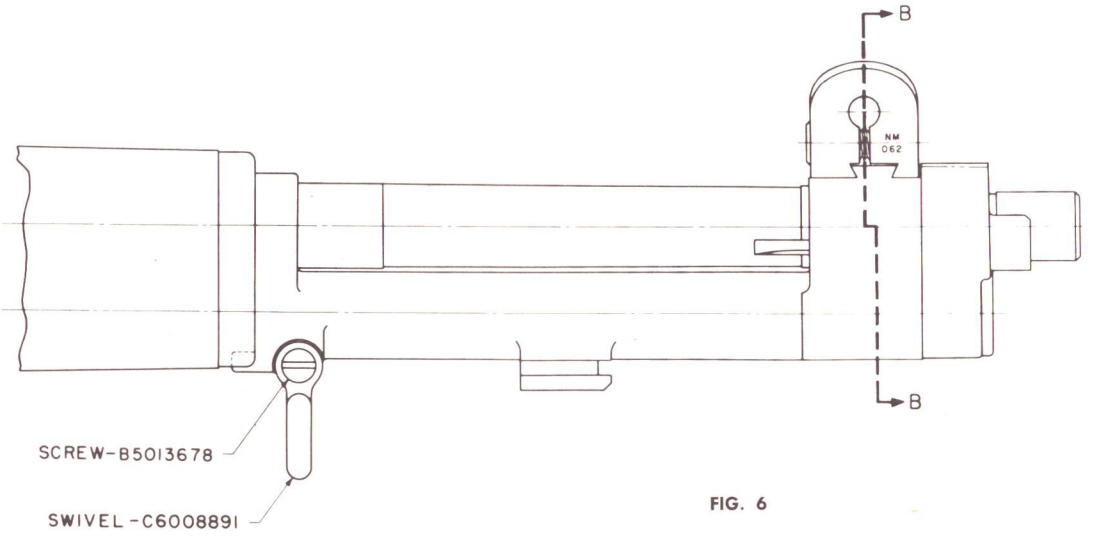

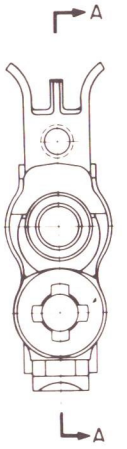

FIG. 6

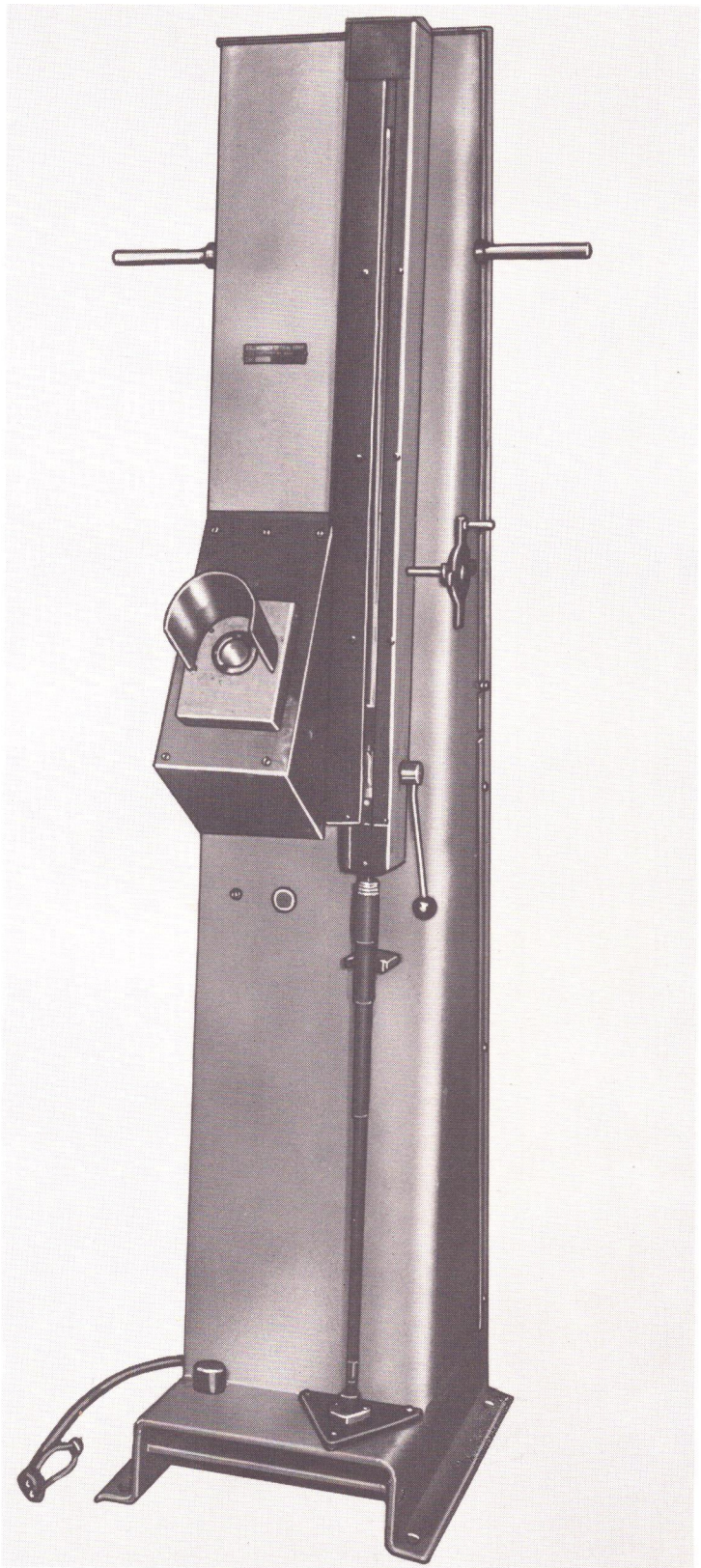

OPTICAL STRAIGHTNESS GAGE
FIG. 7

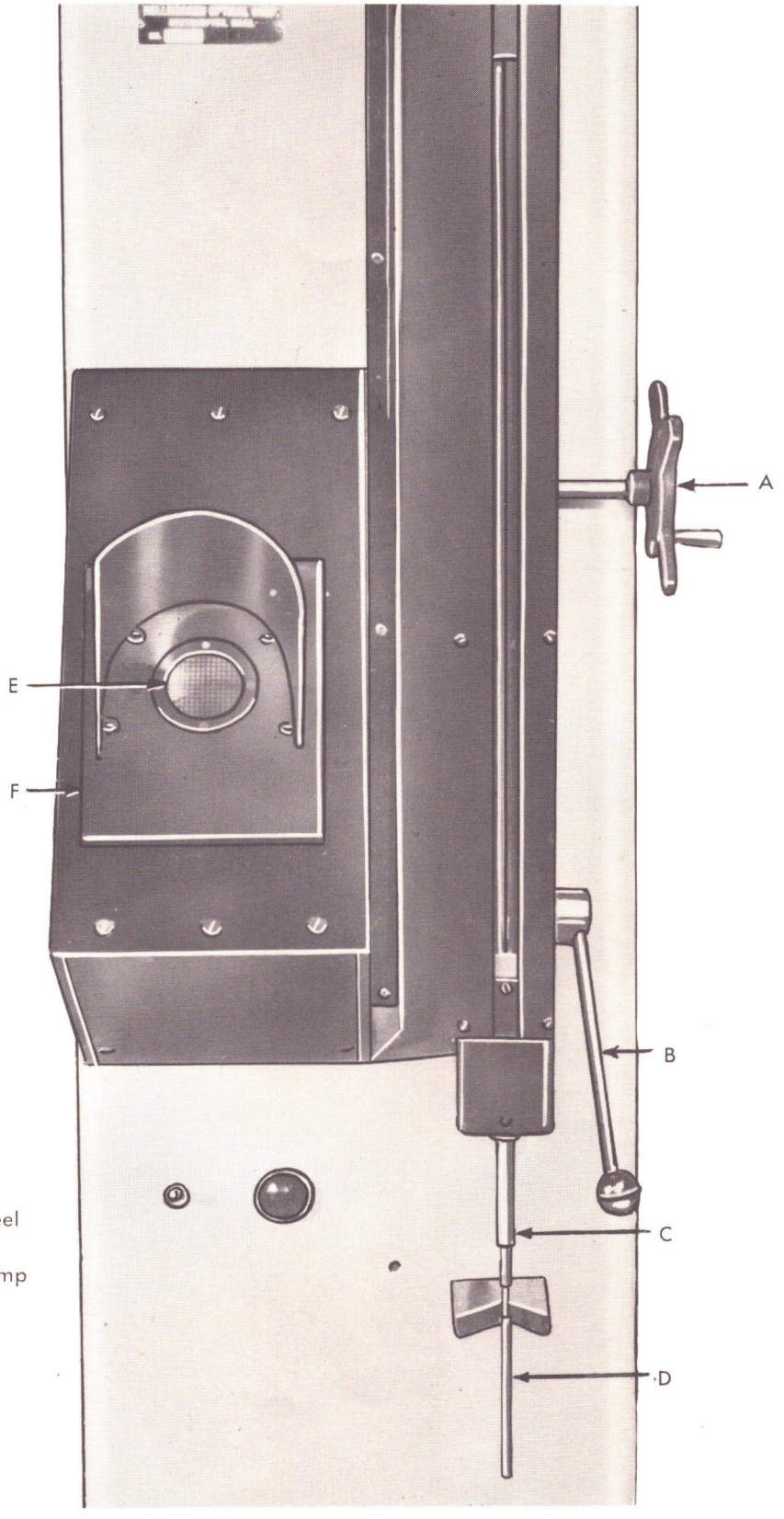

A. Hand Wheel
B. Handle
C. Barrel Clamp
D. Bore Plug
E. Grid
F. Console

OPTICAL STRAIGHTNESS GAGE CONTROLS
FIG. 8

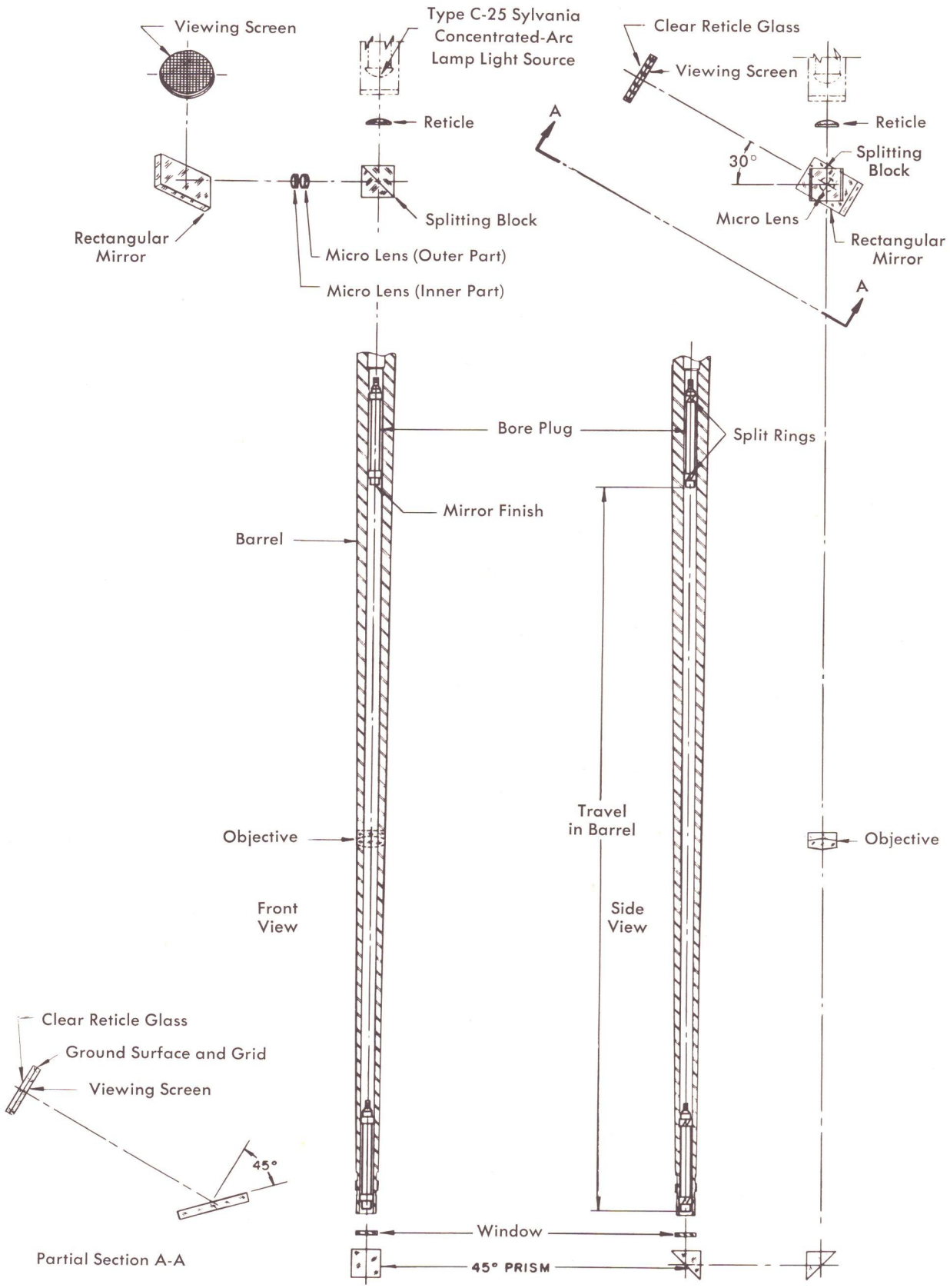

OPTICAL STRAIGHTNESS GAGE
OPTICAL ASSEMBLY
FIG. 9

1. Place bore minimum master ring over air orifice of bore spindle and set minimum limit pointer to height of float in air gage column.

2. Repeat above step using maximum bore master.

3. Remove ring and insert spindle in barrel. Float in column must remain between limit pointers as spindle is passed through barrel.

4. Defective points may be located from breech end with the aid of graduations on handle.

5. Same gage is used to check diameter across rifling grooves. Bore spindle on handle must be replaced with rifling spindle shown in insert and limit pointer reset.

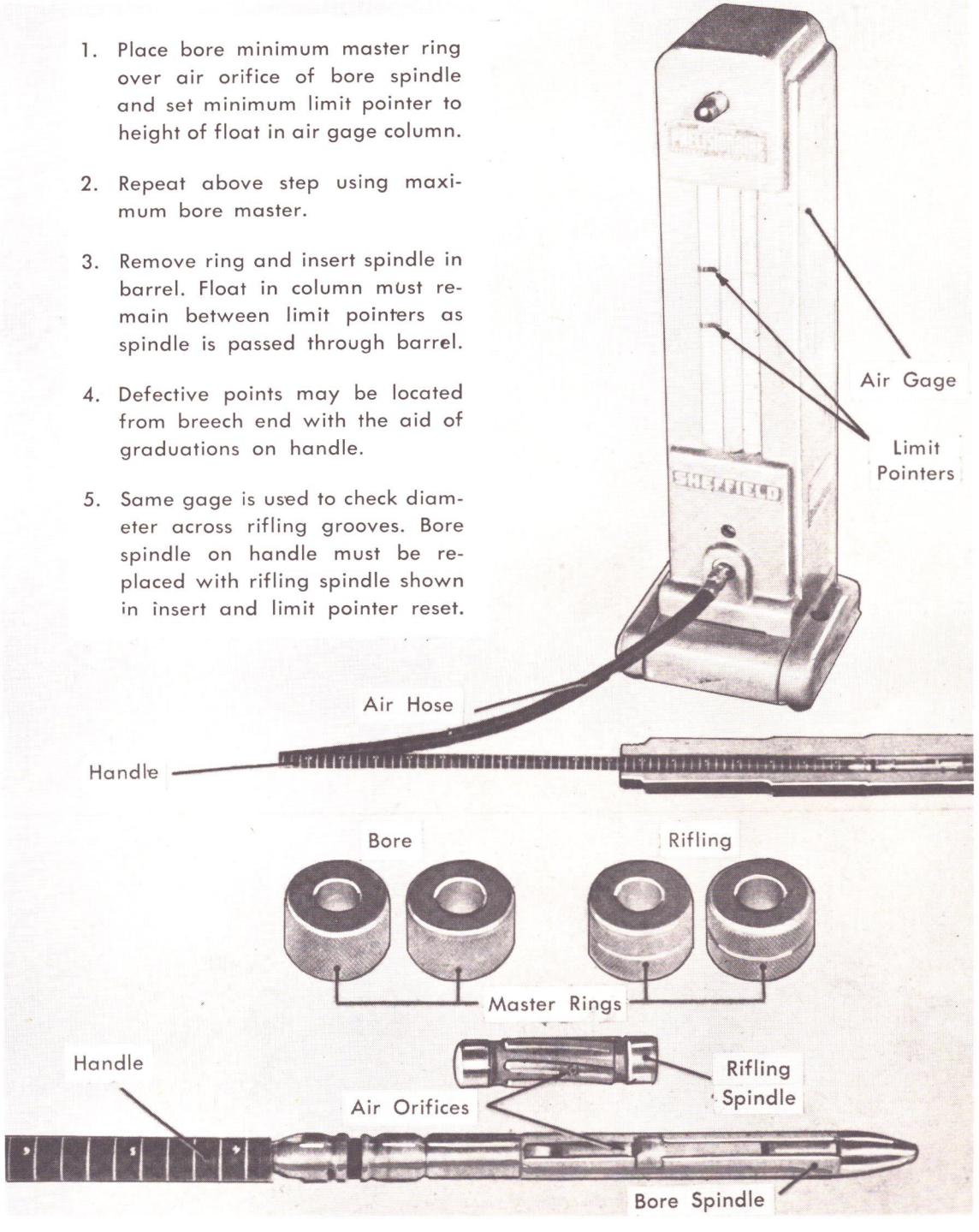

BORE DIA. AIR GAGE
FIG. 10

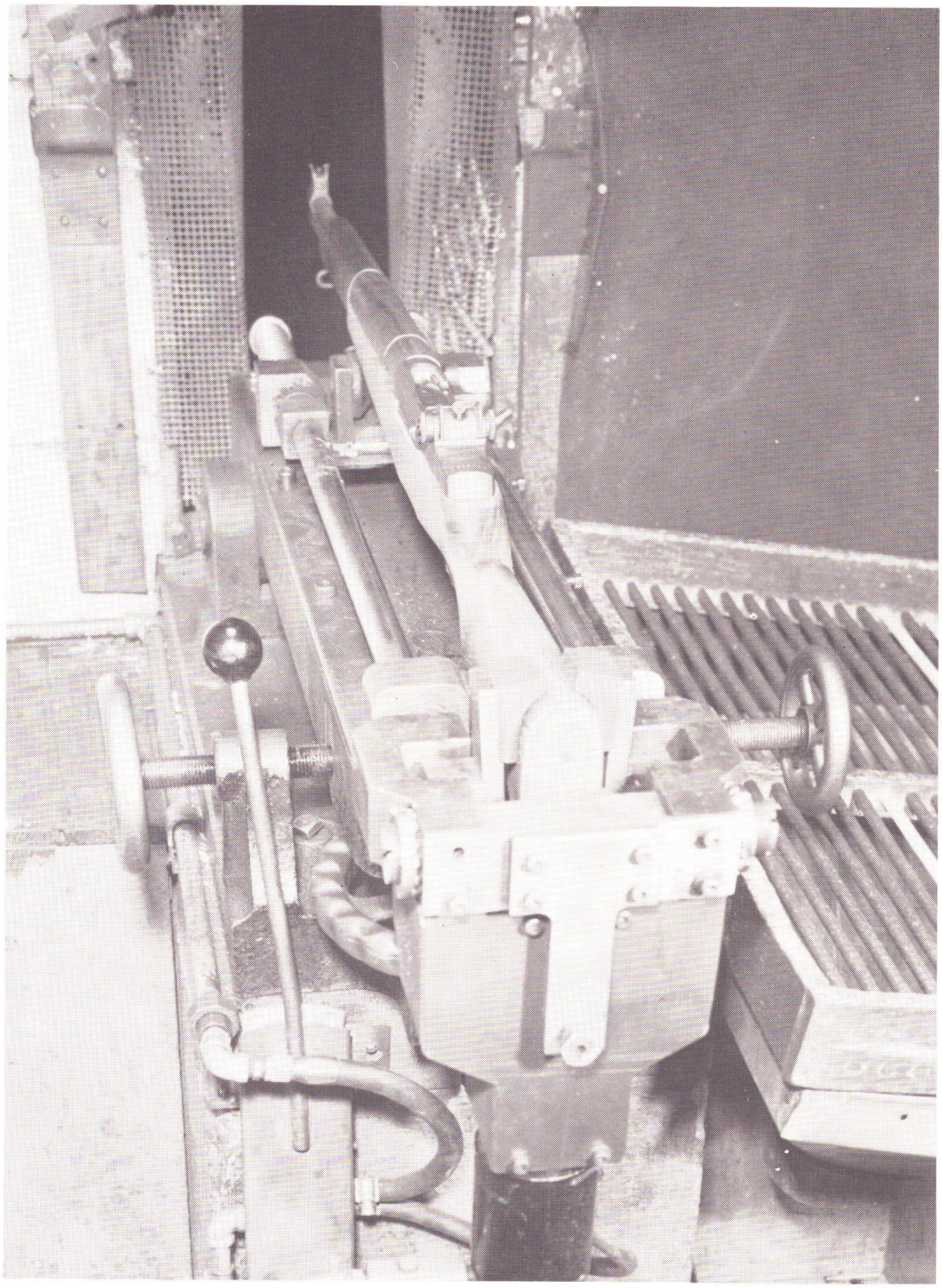

FIRING JACK
FIG. 11

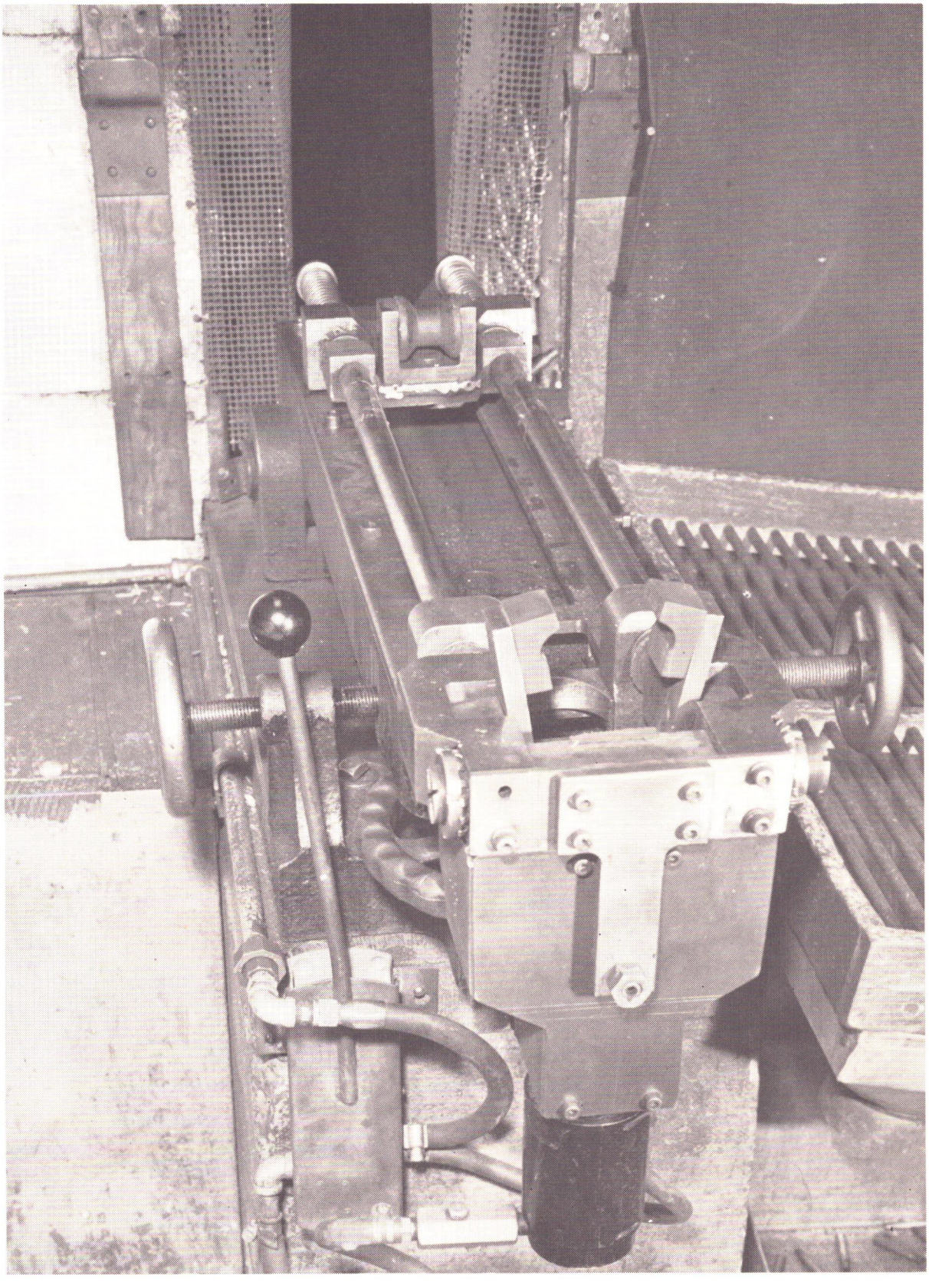

FIRING JACK
FIG. 12

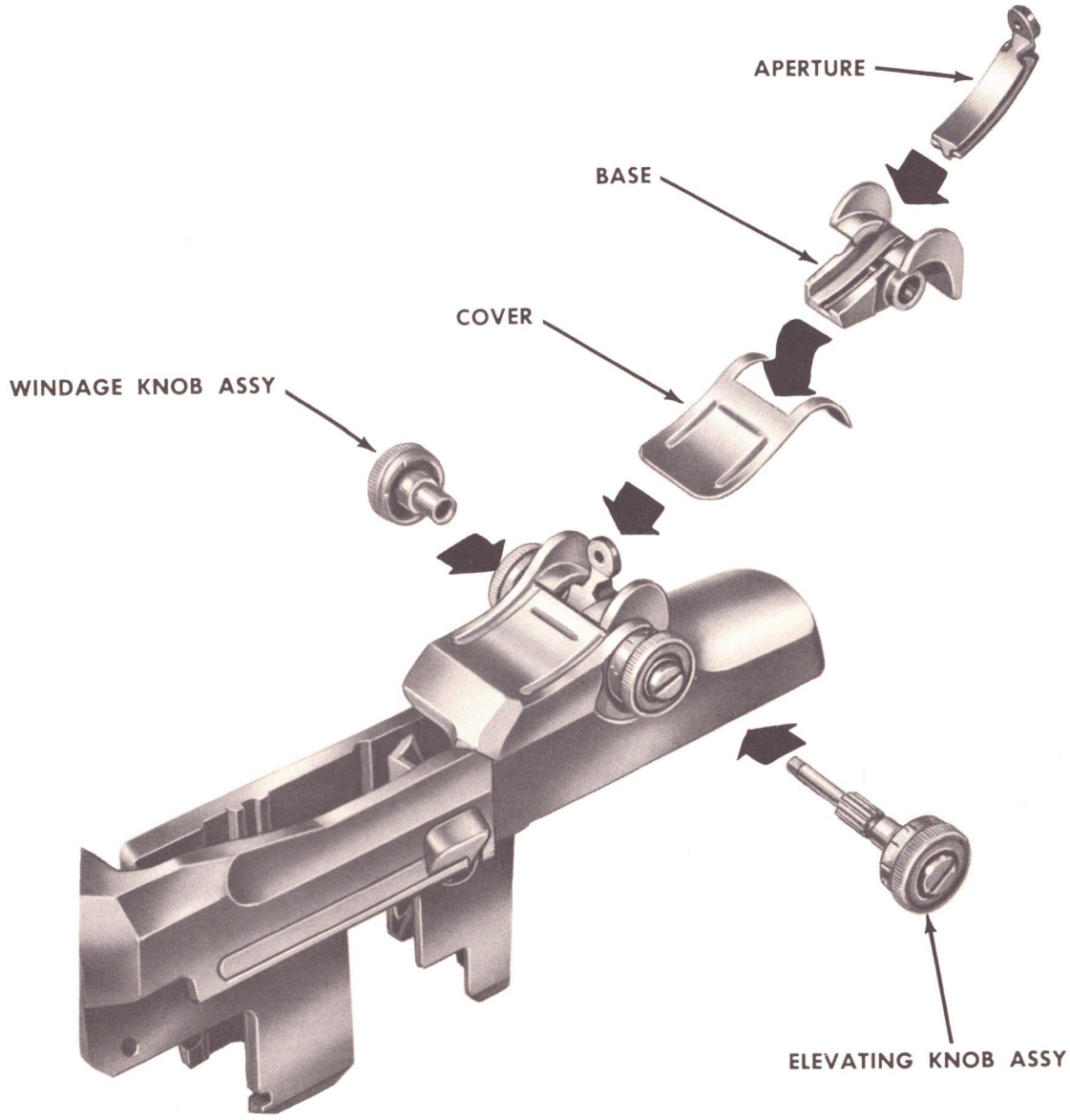

REAR SIGHT ASSEMBLY
FIG. 13

INSTRUCTIONS FOR GLASS BEDDING
RIFLE, U.S., CAL. .30, M1-NATIONAL MATCH



FIGURE 1

THREE MAJOR ASSEMBLIES USED IN THE GLASS BEDDING PROCESS.

IMPORTANT: THE STOCK ASSEMBLY AND TRIGGER HOUSING ASSEMBLY SHALL BE IDENTIFIED WITH THE LAST FOUR DIGITS OF THE RECEIVER SERIAL NUMBER. NOTE: IT IS IMPORTANT THAT THESE COMPONENTS BE KEPT TOGETHER THROUGHOUT THE GLASS BEDDING PROCESS.

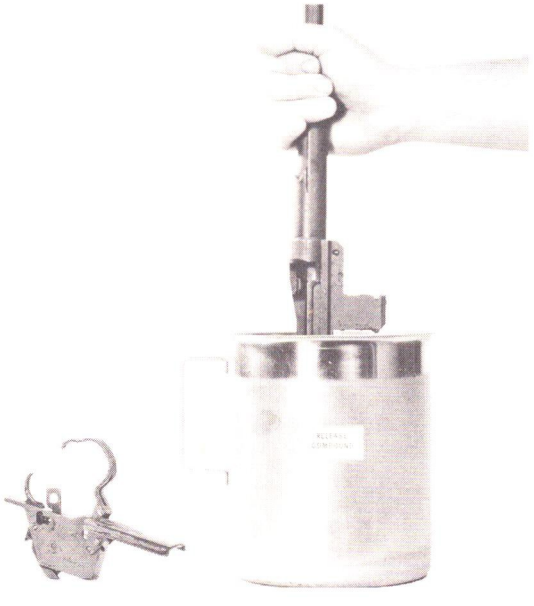

FIGURE 3

DIP AND COMPLETELY SUBMERGE BOTH THE RECEIVER AND TRIGGER HOUSING ASSEMBLY INTO THE RELEASE COMPOUND AND ALLOW TO AIR DRY.

IMPORTANT: DIP COATING INTO THE RELEASE COMPOUND IS NECESSITATED BECAUSE OF THE OUTSTANDING ADHESIVE PROPERTIES OF THE EPOXY GLASS FORMULATION.

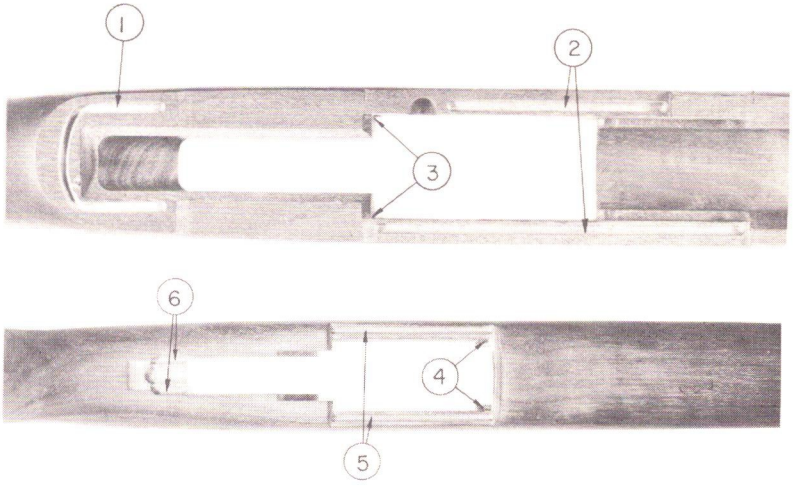

FIGURE 2

TOP AND BOTTOM VIEWS OF STOCK SHOWING ROUTED AREAS (1 THROUGH 6) OF BEDDING SURFACES OF RECEIVER AND TRIGGER HOUSING ASSEMBLY.

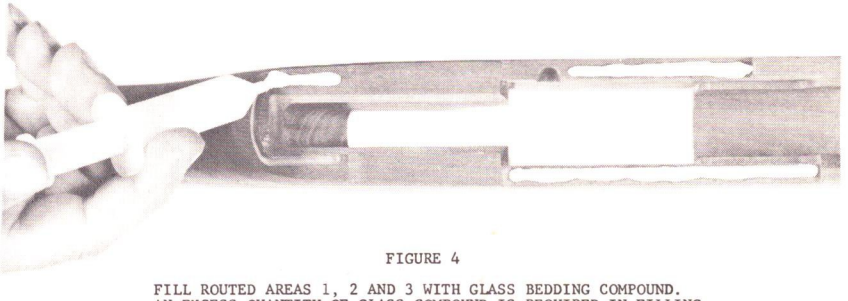

FIGURE 4

FILL ROUTED AREAS 1, 2 AND 3 WITH GLASS BEDDING COMPOUND. AN EXCESS QUANTITY OF GLASS COMPOUND IS REQUIRED IN FILLING THE ROUTED CHANNELS TO INSURE THAT THE INLETTED BEDDING SURFACES ARE COMPLETELY COVERED.

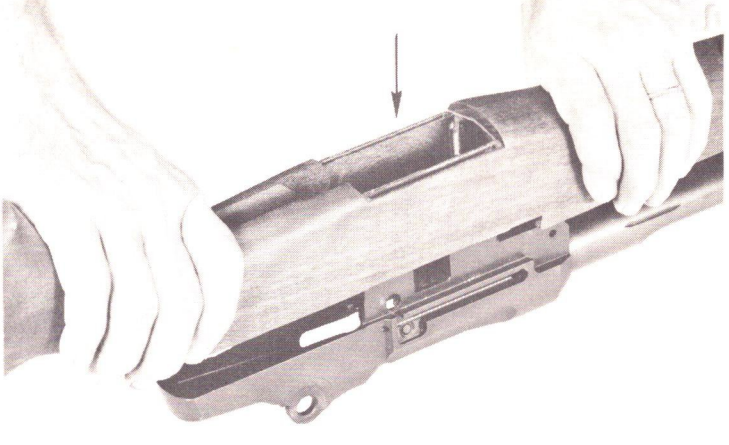

FIGURE 5

PLACE THE BARREL AND RECEIVER ASSEMBLY (RECOIL LEGS UP) AS SHOWN. ASSEMBLE THE GLASS FILLED STOCK ON TO THE RECEIVER IN THE DIRECTION INDICATED.

NOTE: WHEN THE STOCK IS FULLY SEATED ONTO THE RECEIVER, TAP THE BUTT END OF THE STOCK TO INSURE SEATING OF RECOIL SHOULDERS

FIG. 14



FIGURE 6

1. CLAMP THE TRIGGER GUARD TO WITHIN 1/4 INCH OF THE FULL LOCK POSITION. THE TRIGGER GUARD CAN BE HELD IN THIS POSITION WITH THE USE OF A U-SHAPED RETAINER AND/OR PIN.

NOTE: CAUTION SHALL BE EXERCISED TO INSURE THAT TRIGGER GUARD DOES NOT EXCEED ITS 1/4 INCH OPENING.

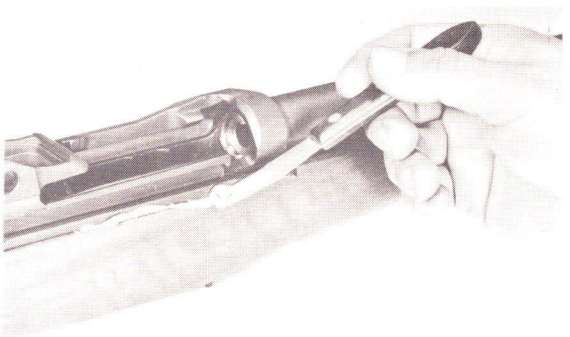

FIGURE 7

REMOVE EXCESS GLASS COMPOUND DISPLACED AFTER ACTION IS CLAMPED. FINAL TRACES OF GLASS COMPOUND SHOULD BE WIPED CLEAN.

THE COMPLETE ACTION SHALL BE ALLOWED TO DRY A MINIMUM OF 8 HOURS.

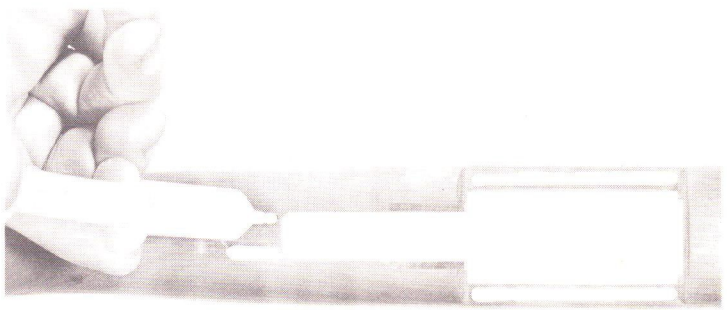

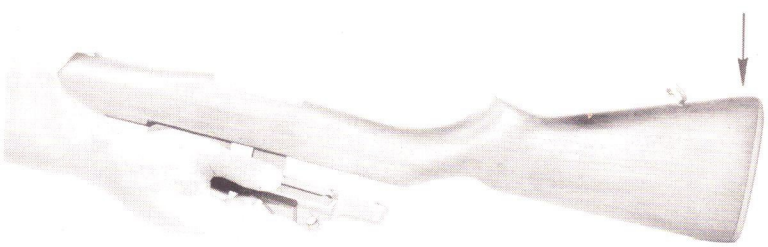

FIGURE 8

DISASSEMBLE THE BARREL AND RECEIVER ASSEMBLY FROM THE STOCK ASSEMBLY AS FOLLOWS:

1. REMOVE THE TRIGGER HOUSING ASSEMBLY.

2. HOLDING THE ASSEMBLY AS SHOWN IN FIGURE 8, STRIKE A SOLID SURFACE WITH THE BUTT END OF THE STOCK TO DISLODGE THE RECEIVER IN THE DIRECTION SHOWN.

3. EXAMINE STOCK TO INSURE THAT A DEFINITE IMPRESSION OF THE RECEIVER BEARING SURFACES HAS BEEN MADE ON THE GLASS BEDDED AREAS OF THE STOCK.

4. CLEAN ALL EXCESSES OF GLASS COMPOUND FROM METAL (RECEIVER & TRIGGER HOUSING ASSY) AND FROM ADJACENT AREAS OF BEDDED SURFACES OF STOCK.

5. IMPORTANT: MAKE SURE THAT THE MOLDED IMPRESSION OF THE RECEIVER BEARING SURFACES ARE NOT DISTURBED WHEN THE SOLIDIFIED EXCESSES OF GLASS COMPOUND ARE REMOVED.

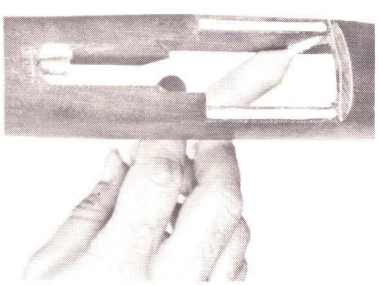

FIGURE 9

1. REDIP AND COMPLETELY SUBMERGE BOTH THE BARREL AND RECEIVER ASSY AND TRIGGER HOUSING ASSY.

2. FILL ROUTED AREAS 4, 5 AND 6 WITH AN EXCESS OF GLASS BEDDING COMPOUND.

FIG. 15

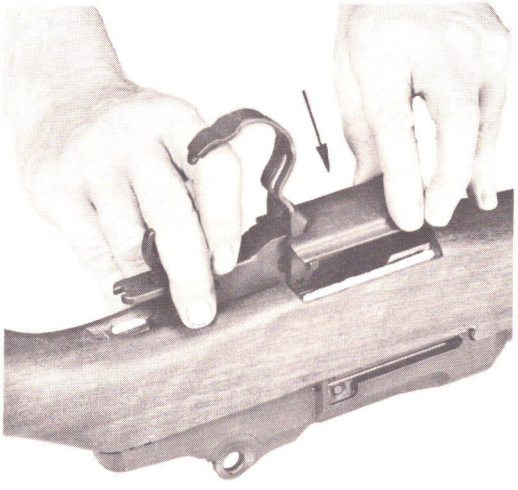

FIGURE 10

1. PLACE THE BARREL AND RECEIVER ASSEMBLY (RECOIL LEGS UP) AS SHOWN. ASSEMBLE THE GLASS FILLED STOCK (AREAS 4, 5 & 6) ON TO THE RECEIVER IN DIRECTION INDICATED.

2. CLAMP THE TRIGGER HOUSING ASSEMBLY AND POSITION THE TRIGGER GUARD WITH THE "U" SHAPED LOCK AS SHOWN IN FIGURE 11.

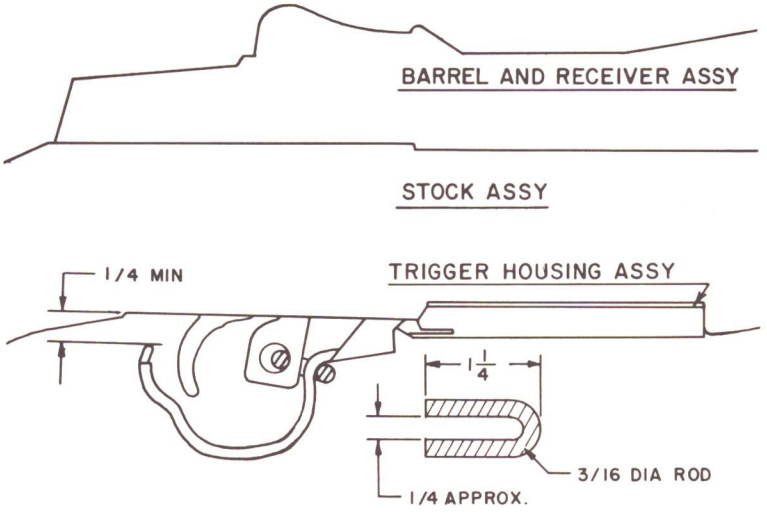

FIGURE 11

CONFIGURATION AND USE OF U LOCK.

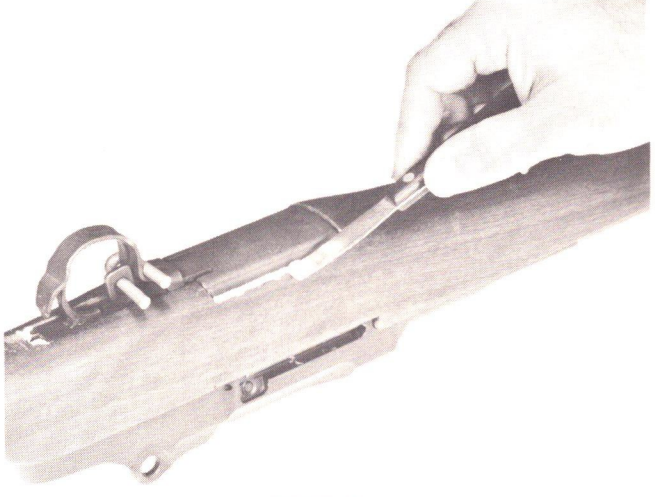

FIGURE 12

1. REMOVE EXCESS GLASS COMPOUND FROM ACTION AS DESCRIBED IN FIGURE 7.

2. ALLOW THE ACTION TO DRY A MINIMUM PERIOD OF 8 HOURS.

3. DISASSEMBLE THE BARREL AND RECEIVER ASSEMBLY FROM THE STOCK ASSEMBLY AS DESCRIBED UNDER FIGURE 8.

4. EXAMINE STOCK TO INSURE THAT A DEFINITE IMPRESSION OF RECEIVER AND TRIGGER HOUSING BEARING SURFACES HAS BEEN MADE ON GLASS BEDDED AREAS OF THE STOCK.

5. IMPORTANT: INSURE THAT THE MOLDED IMPRESSION OF THE RECEIVER AND TRIGGER HOUSING SURFACES ARE NOT DISTURBED WHEN THE SOLIDIFIED EXCESSES OF GLASS COMPOUND ARE REMOVED.

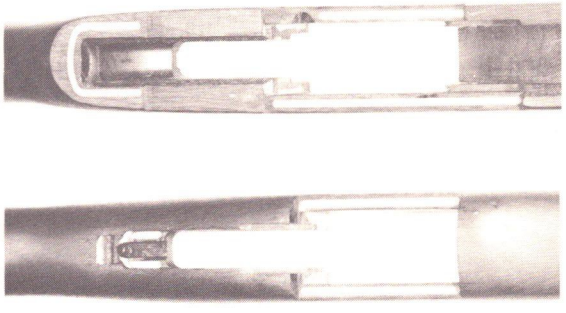

FIGURE 13

TOP AND BOTTOM VIEWS OF COMPLETED GLASS BEDDED STOCK.

FIG. 16

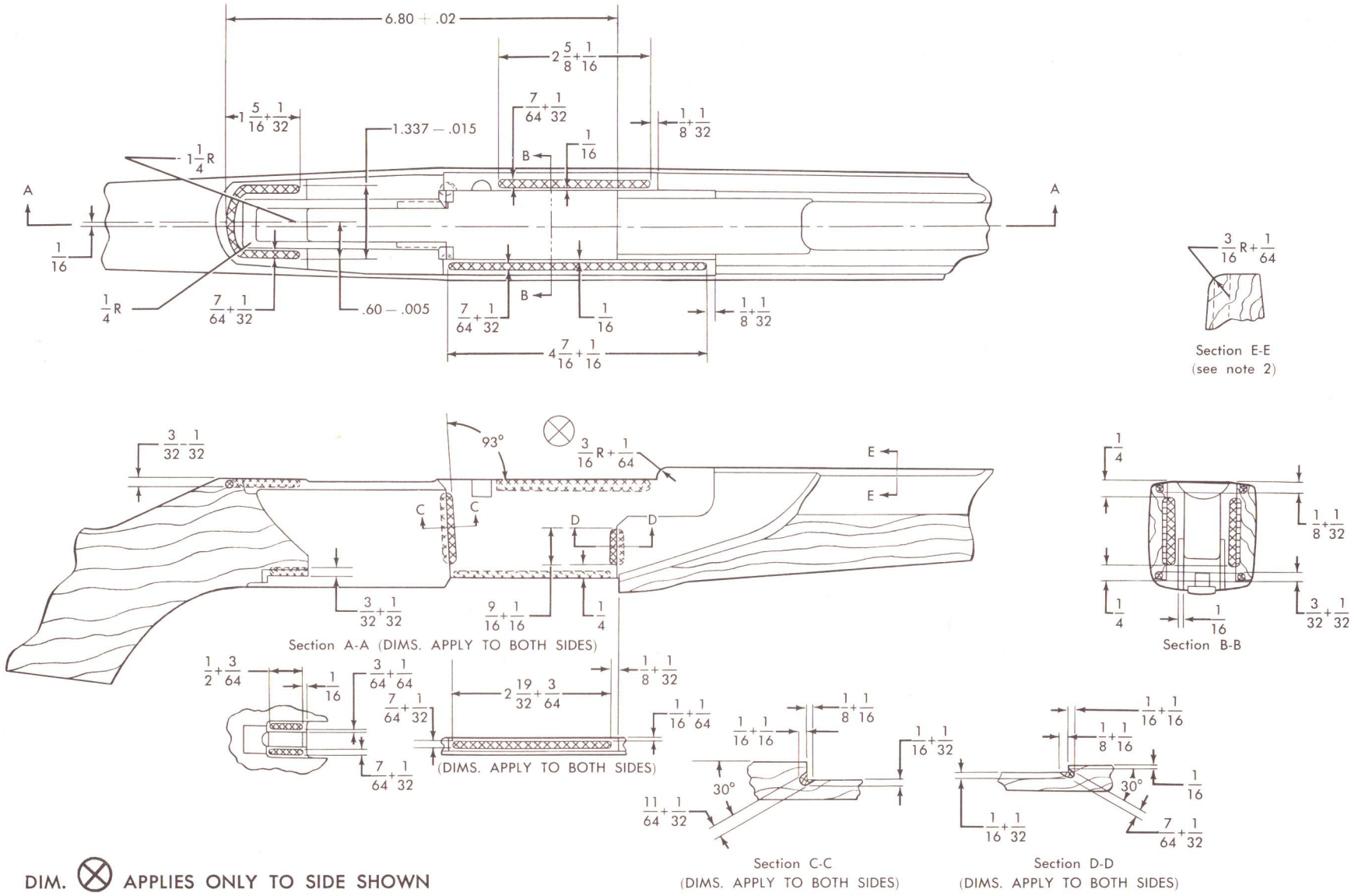

DIM. ⊗ APPLIES ONLY TO SIDE SHOWN

ROUTED STOCK

FIG. 17

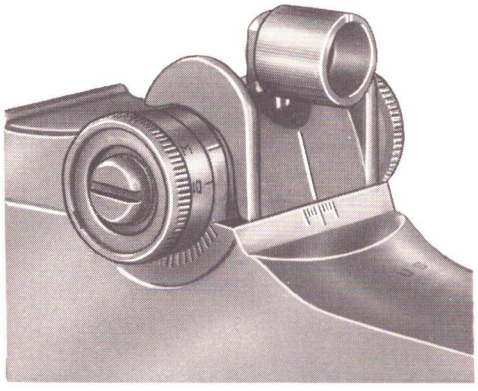

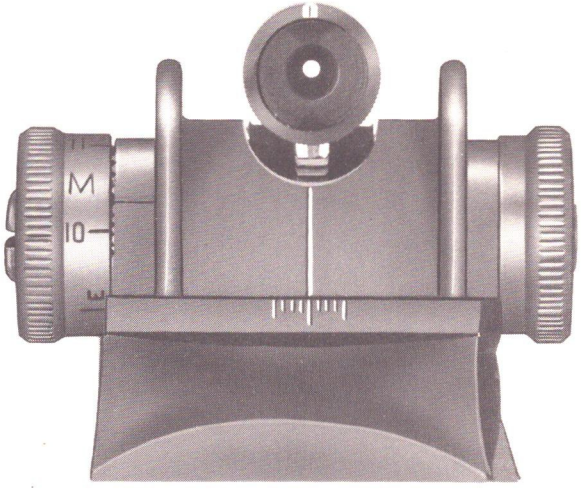

HOODED APERTURE REAR SIGHT
FIG. 18

BULLET
FOR CAL. .30 MATCH
CARTRIDGE M72

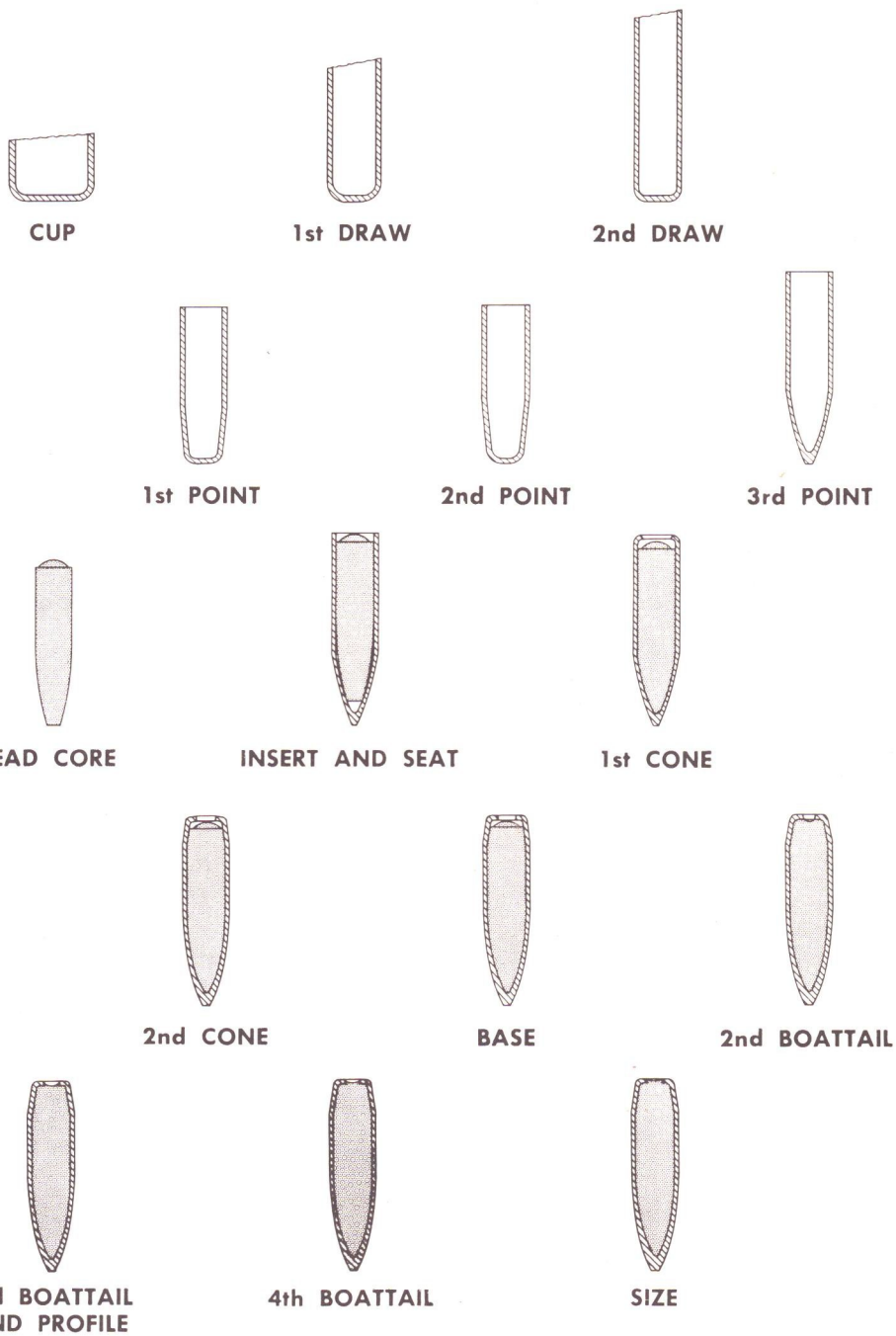

FIG. 19

PART VIII — HELP

The Ordnance Corps is trying to produce the best possible match weapons and ammunitions consistent within the budgetary limits. The shooters criticism, questions, recommendations and general comments will be welcome by the Ordnance weapon and ammunition engineers and technicians available at the displays, on the line or in the headquarters building.

Printed locally by authority TT6630 31 May 60
Office Chief of Ordnance ORDGX.


ORDNANCE CORPS U.S.A.