AIR TRAINING COMMAND

STUDENT STUDY GUIDE

RIFLE MARKSMANSHIP TRAINING

ALR75330-II

October 1964

RESPONSIBLE AGENCY OF ATC

LACKLAND MILITARY TRAINING CENTER
LACKLAND AIR FORCE BASE, TEXAS

AFPS 8A

DESIGNED FOR ATC COURSE USE ONLY

ABOUT STUDENT STUDY GUIDES AND STUDENT WORKBOOKS

Student study guides and student workbooks are designed by the Air Training Command as student training publications for use in training situations peculiar to courses of this command. Each is prepared for the particular learning objective(s) of the plan of instruction.

The STUDENT STUDY GUIDE contains the specific information required in the learning objective(s) or it will refer to other publications which the student is required to read. It contains the necessary information which is not suitable for student study in other available sources. The material included or referred to is normally studied either outside the classroom or during supervised study periods in the classroom. Also included are thought-provoking questions which permit self-evaluation by the student and which will stimulate classroom discussion.

The STUDENT WORKBOOK contains the specialized job procedures, important information about the job, questions to be answered, problems to be solved and/or work to be accomplished by the student during the classroom/laboratory, airplane/missile/equipment activity. It serves as a job sheet, operations sheet, mission card, check list or exercise to be performed during classroom or laboratory periods. Also included are questions which will aid the student in summarizing the main points of the learning objective(s).

The STUDENT STUDY GUIDE AND WORKBOOK is a training publication which contains both student study guide and student workbook material under one cover.

Since this publication is DESIGNED FOR ATC COURSE USE ONLY and must not conflict with the information and/or procedures currently contained in Technical Orders or other official directives, it is updated frequently to keep abreast of changes in qualitative training requirements. Students who are authorized to retain this publication after graduation are cautioned not to use it in preference to Technical Orders or other authoritative documents.

AIC MyscoFski

Contents

UNIT	SUBJECT	PAGE
1	Introduction To Rifle Reloading	1
2	Premarksmanship Training	17
3	Range Operations	41
4	Coaching Techniques	49
5	Mechanical Training, U.S. Carbine, Caliber .30, M2	59
7A	Mechanical Training, Caliber .22, Rifle	98
7B	Telescopic Sights, Spotting Scopes and High-Power Score Book	103
9	Mechanical Training, Rifle, M16, Caliber 5.56mm	111
11	Mechanical Training, U.S. Rifle, Caliber .30, M1	133
6, 8, 10, 12	Range Firing: Rifle; Rifle, Cal. .30, M1; Rifle, Cal. .22; U.S. Carbine, Cal. .30, M1 or M2; Rifle, M-16, 5.56mm	163

REFERENCES

Student Study References ii

	SUBJECT	STUDY ASSIGNMENT
1.	Range Safety	Ch. 7, AFM 50-4; Appendix III, FM 23-5; AFR 50-13.
2.	Ballistics	Lyman & Speers Reloading Manuals; SSG ALR75330-III-6A.
3.	Rifle Reloading	Lyman & Speers Reloading Manuals; Complete Guide to Handloading; SSG ALR75330-I-15.
4.	Mental Discipline	Precision Shooting, Vol. 3, July 1956.
5.	Sight Alignment & Sight Picture	Pp. 112-127, AFM 50-4; pp. 17 thru 19, SSG ALR75330-II-2.
6.	Triangulation	Pp. 123-128, AFM 50-4; pp. 19 thru 22, SSG ALR75330-II-2.
7.	Range Personnel Requirements	Sec. B, ch. 3, AFM 50-25; SSG ALR75330-II-3.
8.	Courses of Fire & Sight Adjustments, Carbine	Pp. 184-192, AFM 50-4; AFR 50-8; pp. 169-170, SSG ALR75330-II-6, 8, 10, 12.
9.	Breath & Trigger Control	Pp. 78-79, 110-113, FM 23-5; pp. 23 and 36, SSG ALR75330-II-2.
10.	Positions	Pp. 84-106; FM 23-5; pp. 22 thru 36, SSG ALR75330-II-2.
11.	Mech. Training, Carbine	Pp. 1-83, AFM 50-4; SSG ALR75330-II-5.
12.	Instructional Firing, Carbine	Pp. 169-170, SSG ALR75330-II-6, 8, 10, 12.
13.	AFQC, Carbine	P. 170, SSG ALR75330-II-6, 8, 10, 12; AFR 50-8.
14.	Mech. Tng & Sight Adjustment, Remington, 40X, .22 Rifle	SSG ALR75330-II-7A.
15.	Courses of Fire, Rules & Scoring .22 Rifle	SSG ALR75330-II-6, 8, 10, 12; AFR 50-8; NRA Smallbore Rule Book.
16.	Sight Adjustment, Telescopic Sights	SSG ALR75330-II-7B; Facts about Telescopic Sights.
17.	4-Position, 200 Aggregate, .22 Rifle	AFR 50-8; SSG ALR75330-II-6, 8, 10, 12.
18.	Dewar Course	SSG ALR75330-II-6, 8, 10, 12; p. 54, NRA Smallbore Rule Book.
19.	Mech. Training, M16	SSG ALR75330-II-9; AFM 50-12.
20.	Courses of Fire & Sight Adjustment – M16	SSG ALR75330-II-6, 8, 10, 12; AFR 50-8.
21.	Instructional Firing, M16 Rifle	P. 171, SSG ALR75330-II-6, 8, 10, 12.
22.	AFQC, M16	SSG ALR75330-II-6, 8, 10, 12; AFR 50-8.
23.	Mech. Training, M1 Rifle	Pp. 5-70, FM 23-5; SSG ALR75330-II-11.
24.	Courses of Fire & Sight Adjustment – M1 Rifle	P. 7, AFR 50-17; SSG ALR75330-II-6, 8, 10, 12; AFR 50-8; p. 17, NRA High-Power Rule Book.
25.	Spotting Scopes & Wind Doping	Pp. 157 thru 159, SSG ALR75330-II-11.
26.	Scorebooks	Pp. 107 thru 110, SSG ALR75330-II-7B.
27.	Dry Fire Exercises	Pp. 123-132, FM 23-5; pp. 37 thru 40, SSG ALR75330-II-2.
28.	Instructional Firing, M1 Rifle	P. 167, SSG ALR75330-II-6, 8, 10, 12.
29.	Team Fire, M1 Rifle	Pp. 53-59, SW ALR75330-II-1-9; AFR 50-17.
30.	National Match Course, M1 Rifle	AFR 50-17; p. 15, AFR 50-8.
31.	Coaching Techniques	Pp. 234-238, AFR 50-4; SSG ALR75330-II-4.

Rifle Marksmanship Training Course
Lackland Military Training Center
Lackland Air Force Base, Texas

ALR75330-II
Student Study Guide
October 1964

UNIT 1

INTRODUCTION TO RIFLE RELOADING

OBJECTIVE

To know the advantages of handloading rifle ammunition; to know what equipment is necessary in the handloading of ammunition; to realize that the proper selection of components assures maximum results; and to understand the step-by-step procedure required to successfully complete reloading one round of rifle ammunition.

INTRODUCTION

Handloading of ammunition as a hobby has grown by leaps and bounds throughout the United States within the past few years. There are many reasons behind this popularity which will be covered later. However, handloading ammunition is also a phase of your job as a marksmanship instructor. Your base is not authorized equipment to reload ammunition unless there is someone capable of safely operating the equipment and maintaining it. The only personnel in the Air Force given formal training in this area is the Marksmanship Instructor (AFSC: 75330). For this reason it is necessary that you have a good working knowledge of this subject. Within this course you are given a sound platform on which to build a well-rounded knowledge of both rifle and pistol ammunition reloading. You will not know it all; it takes time and study to gain this information. Remember you will have to be on your own in this matter, the Air Force does not have any regulations, manuals, etc., to help you. You must rely on some of the many qualified experts in this field, through civilian publications.

ADVANTAGES

When thinking of handloading, there are four advantages that usually come to mind. They are (1) accuracy, (2) economy, (3) versatility, and (4) pleasure. With the proper care and components, you can produce a more accurate round of ammunition than any manufacturing company.

Why is this? You can take more time and patience making one round than the factory can afford. Theirs must be on a production basis to insure a profit. You can load for your individual weapon and range required. The factory must make ammunition that will work well in all weapons and at almost all ranges. It is well known that one weapon might give you a minute of angle with one lot of ammunition, another weapon using the same lot of ammunition can not hold three minutes of angle. You can decide what weapon and at what range you desire to shoot and develop the best load for this specific job. All this and it is cheap. You can save yourself or Uncle Sam many dollars by reloading. For example, not counting equipment, it costs approximately $6.05 per box of 20, for Caliber 30/06 match-grade ammunition. You can make it yourself using government cases, as authorized in AFR 50-22, for approximately $1.75; thus, you can use $4.30 on other shooting equipment. Another distinct advantage is versatility. If you own several rifles and one scope, you can load your ammunition so that they all hit at the same point at any given distance without changing your scope adjustments. This can also be accomplished with different bullet weights. Simply load for point of aim. It takes time and patience, but is sometimes well worth the effort. Finally, there is the pleasure aspect of reloading. Nothing makes a man feel better than to know he makes a better product than the factory, at a cheaper price, and brings home the meat or trophies he is after. In fact, this sometimes becomes a case of the tail wagging the dog. A man would rather reload than shoot; he only shoots so he will have something to reload.

EQUIPMENT

In order to enjoy any or all of the advantages of handloading, you must have the proper equipment. For a hobby or use in your job, you must have the same basic items. The equipment used by the military is outlined in ECL 915; no brand names or designs are mentioned. This leaves you some discretion, but this again is controlled by the local purchase system and your supply activity along with your recommendations. However, as a hobby, your limitations are based on the amount of reloading you plan to do and the price you can afford. Normally in reloading equipment the same as with weapons, you get only what you pay for. A cheap item usually does an inferior job. This you will find especially true of precision mechanical items. Get the best you can afford. It is cheaper in the long run. The basic items of equipment for reloading rifle ammunition are as follows:

1. Reloading Press w/Shell Holder

2. Dies

3. Case Length Gauge and Case Sizing Gauge

TYPES OF RELOADING PRESSES



Figure 15-1. "C" Type.

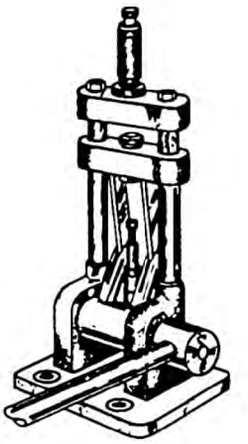

Figure 15-3. "H" Type.

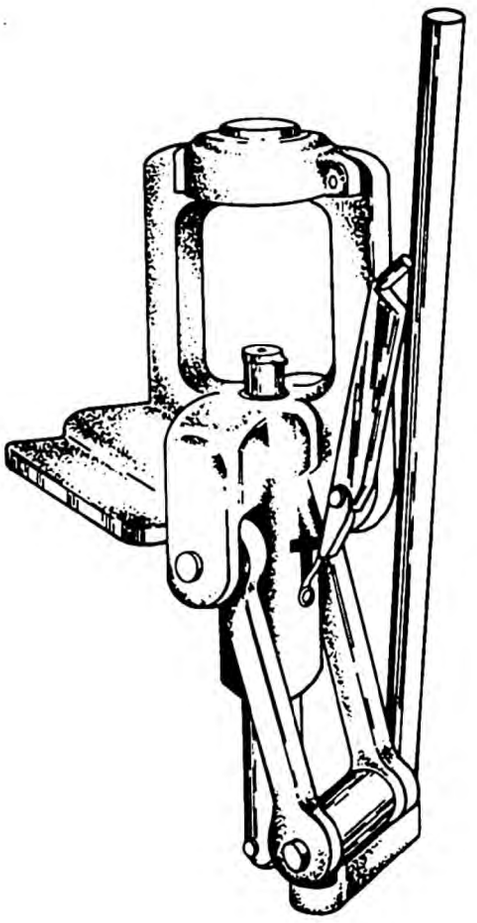

Figure 15-2. "O" Type.

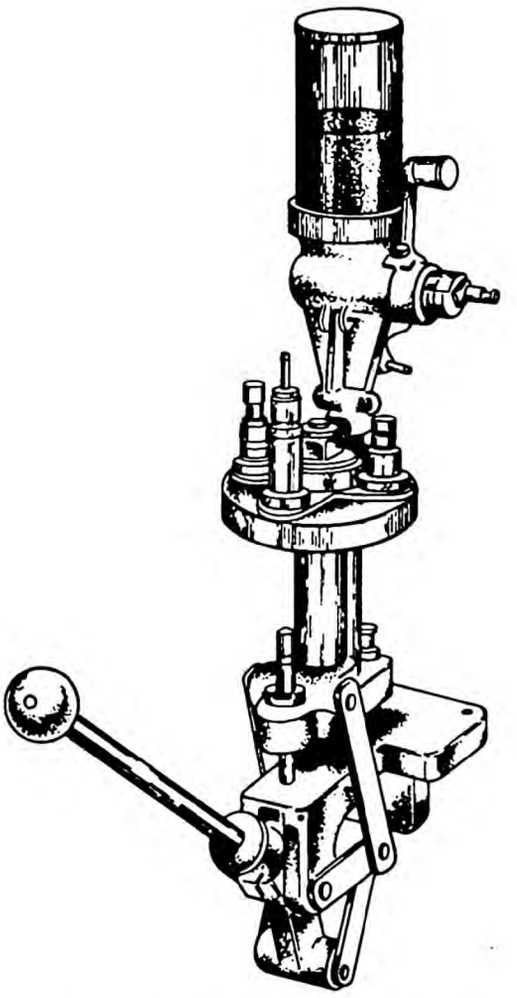

Figure 15-4. Turret Type.

4. Case Trimmer and Deburring Tool

5. Powder Measure

6. Powder Scale

7. Funnel and Additional Equipment

Most of these items are standard and relatively simple. We can briefly describe each one:

Reloading Press w/Shell Holder. This is your biggest and most expensive piece of equipment. It can make your job awkward or easy. There are basically four (4) types of presses: The "C" Type (fig. 15-1), the "O" Type (fig. 15-2), the "H" Type (fig. 15-3), and the Turret Type (fig. 15-4). The "C," "O," and "H" Types are the slowest of the four. The Turret Type is normally used for larger production. The "O" Type has one main advantage over the "C" Type in that it will not spring or spread as a "C" Type can do if not built sufficiently strong. The ease of operation is about the same for each of them. Most of the "C," "O," and "H" presses can be used either on the up or down stroke. This you can set to suit your individual preference. The press normally comes with one shell holder and one type primer arm. Some shell holders will accommodate several different types of cartridge cases, i.e., .45 automatic and 30/06 cases; both fit the same shell holder. Keep in mind that they make both round and flat primers; get the correct primer punch for the primer you intend to use. You can also get accessories for these presses: automatic primer feed, primer catcher, etc. These all add to the cost, naturally.

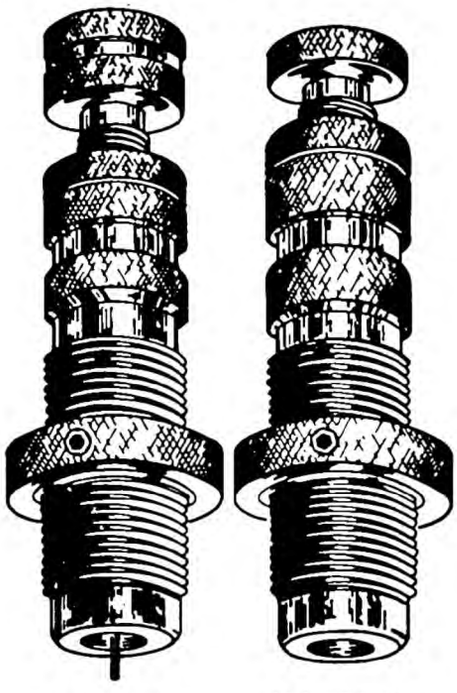

(A) SIZER (B) SEATER

Figure 15-5. Reloading dies.

Dies. These are the next important items you need. A die set is a precision machined piece of equipment. They can make or break a reloading job. Get a good reputable brand name. Rifle dies are normally a 2-die set as compared to the 3-die set for pistol. The first die used completely resizes the case, decaps the old primer, and expands the case neck. When you resize a case neck you do this from the outside, but due to the different thickness in case necks, this is not good enough. If you neck size from the outside only, some cases might hold a bullet tightly, others loosely, thus losing accuracy. When using this die it first closes or resizes the neck from the outside, then pulls a proper size expanding ball or plug through the neck, thus expanding all the necks to the same size, regardless of case neck thickness. The second die (fig. 15-5B) seats the bullet to the proper depth and crimps the case if necessary.

Case Length Gauge. A case length gauge is necessary as cartridge case necks, being of a brass alloy, tend to flow forward when subjected to high temperatures in being fired. A case too long will hit the lip of the throat within the chamber and cause the bolt to close hard or cause hard extraction. In time, this will damage the throat lip and ruin the barrel. Case gauges are of two types, one is used for only one caliber cartridge. This type, a cylindrical piece of steel, has a chamber cut inside that the case fits into resting against the shoulder. (See fig. 15-6.) The front and rear end of the gauge has steps or two different levels. One is a maximum the other a minimum. The one at the rear measures proper shoulder length which directly affects headspacing of each cartridge. The other end measures case length. Keep your cases between the two levels. The other type is a combination case gauge, it measures case length only, but is capable of measuring approximately 20 different cartridge cases. (See fig. 15-7.)

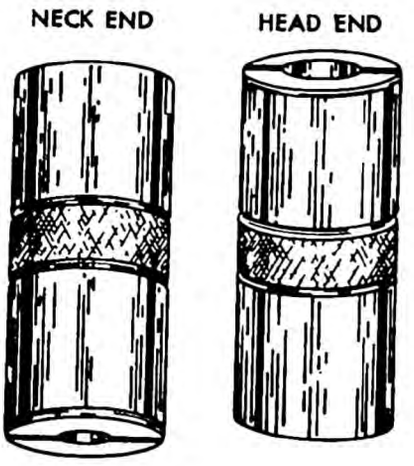

Figure 15-6. Case length and sizing gauge.

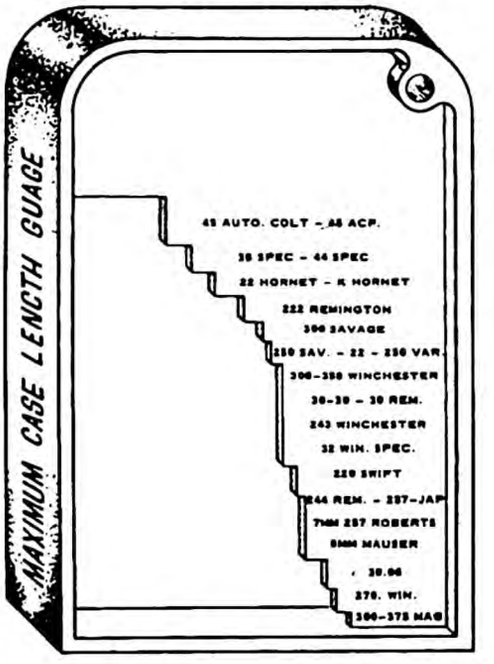

Figure 15-7. Case length only gauge.

Case Trimmer. If you find your case too long by using the case length gauge, you must cut it down. The case trimmer (fig. 15-8) is designed to do this evenly. It is hand-cranked, but takes little effort. Each trimmer comes with a collet and a pilot. The collet is designed to hold several different cases. However, the pilot is designed for a specific caliber only. The pilot size is determined by bullet diameter, by this I mean one pilot will handle any cartridge using a .308 diameter bullet and another pilot, all cartridges firing a .243 bullet, whether it is called a Caliber .243 or Caliber .244. After trimming the case, it will have a burr on both the inside

and outside of the neck. This is caused by the blades of the case trimmer cutting the neck square. This must be removed to seat a bullet and to keep the outer burr from scraping the chamber of the rifle. The inside–outside deburring tool does this. Use this with caution as you can cut the case too much with excessive pressure.

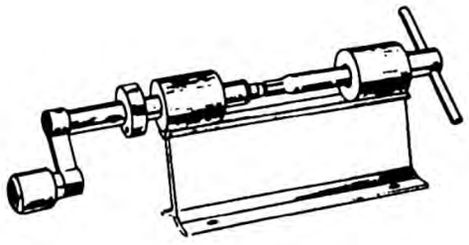

Figure 15-8. Case trimmer.

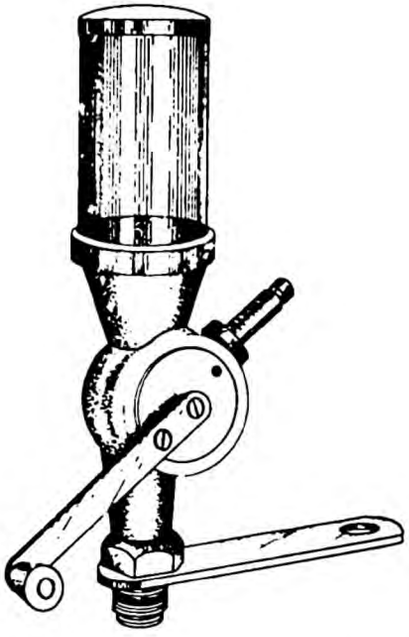

Figure 15-9. Powder measure.

Powder Measure. The powder measure is used to speed up reloading. It is designed to throw a charge of powder accurately to approximately .5 grain of powder. Its accuracy is dependent upon how precise you are with your movements and the type of powder used. You must hit the stop with the same force each time to insure accurate loads. The finer the powder the more uniform the results will be. Remember this measure must be checked for the proper load approximately every ten (10) throws if the powder scale is not used to measure each individual charge. (See fig. 15-9.)

Powder Scale. The scale is used in conjunction with the powder measure. It gives a very accurate measurement of a powder charge. It is also used to check a powder measure. The powder from the measure is dumped into the pan on the scale for a final check of the weight. This scale must be zeroed prior to use and each time you change its location. These scales come in different types and price ranges. The simple balanced beam type is accurate and economical. (See fig. 15-10.) The use of an electrical powder scale is fine, but expensive.

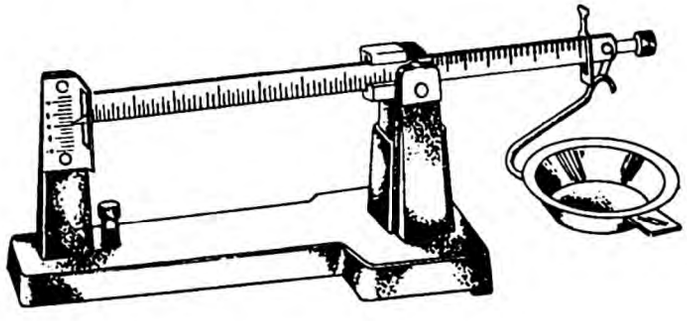

Figure 15-10. Powder and bullet scale.

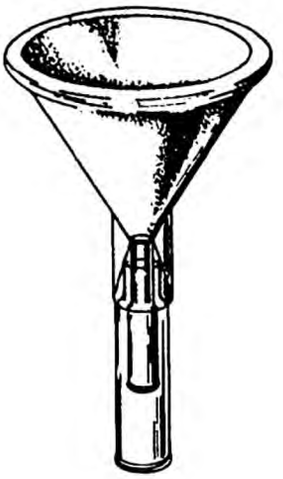

Figure 15-11. Funnel.



Figure 15-12. Deburring tool.

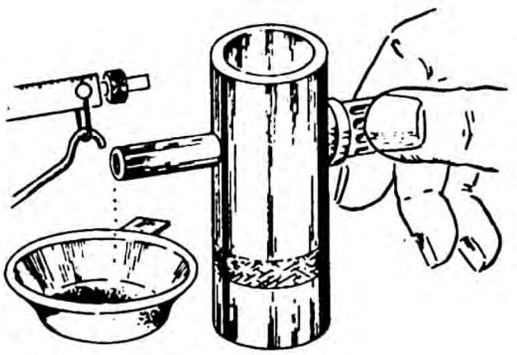

Figure 15-13. Little Dripper.

Funnel and Additional Equipment. There are many other items that can be procured to make reloading faster or easier. One is the funnel (fig. 15-11); this is used to pour the powder from the pan on the powder scale into the cartridge case. The clear plastic type is the best, as you can see if any powder is hanging up in the funnel. There is an item called the "Little Dripper" (fig. 15-13); this is used in conjunction with the powder scale. It allows you to drip a very small amount of powder onto the pan in the powder scale for weighing. A container of lubricant is also needed. All cases must be lubricated prior to being used in the resizing die. Lanolin is an excellent choice. Remember, do not overlubricate or you will get dents in the case. There are many other additional items that can be procured as you can see by checking dealers' catalogs.

COMPONENTS

Maximum results in reloading can be accomplished only by the proper selection of components. The wrong selection can cause loss of accuracy and is also very dangerous. In discussing the selection of components we will cover the simplest first, then go on to the more complicated. (We will not discuss the cartridge case at this time, although it is a component of a cartridge. It will be covered under the step-by-step procedure.) The simplest is the primer. The best rule to follow is to get the same type primer as the case you intend to reload. If you are reloading Winchester cases, get Winchester primers. In rifle primers there are two basic types, "Large Rifle" and "Small Rifle." Make sure you get the proper size for your cartridge case. Both Large and Small Rifle primers come in two designs, the round and the flat. The type you select will depend on the primer punch on your press. There is one word of caution on primers: do not use pistol primers in place of rifle primers.

The pistol primer is made of thinner material and can easily be punctured by the firing pin of a rifle. Your eyes are the closest thing to the rear of a rifle receiver; gas escaping through a punctured primer can blind you. The next component to select is the bullet. In addition to utilizing the proper diameter bullet, you must select the proper shape and composition. Selection of diameter is dependent upon the caliber of weapon. What type bullet should you choose? Round nose, spire point, spitzer, flat base, boat tail, or full jacketed? There are many to choose from. First decide on what you wish the bullet to do. Is it supposed to expand? Blow up? Penetrate? There are many factors that influence the selection of a bullet. One must rely on an expert who has had the chance to experiment with most of them and accurately record the results. The best bet is to read up on ballistics by a recognized authority. The selection and amount of powder is the most important and complex part of components. One must first understand that there are many different powders all designed for a specific purpose; improper use or selection can kill you. Rifle powders are either single base (nitrocellulose) or double base (nitroglycerin and nitrocellulose) as compared to pistol powder which is double base only (nitroglycerin and nitrocellulose). Powders are again broken down by burning characteristics, fast burning or slow burning. They are also designed for large capacity cases, small capacity cases, full charge load in small cases, etc. The grain size in powder also differs; some are ball-shaped, some are flakes, others are like small pieces of spaghetti. All of these must be taken into consideration when selecting the proper powder. One fairly stable rule is to choose such a powder that the recommended load will nearly fill the case. This will insure better accuracy. To choose the proper powder you must know the type of ammunition you are going to reload, know the bullet weight, and have a good reloading guide or handbook. Both Lyman and Speer put out excellent books on reloading data. These manuals cover powder, bullets, velocity, and reloading procedures. Do not try guessing on your own; it may be fatal!

STEP-BY-STEP PROCEDURES

In order to obtain maximum results in reloading, you must follow a step-by-step procedure. The more variance you have in your methods the less accuracy you obtain from your ammunition. The first requirement is to get a work location that is clean and large enough in which to operate the equipment with ease. This should be a place in which you can leave the equipment set up if you must continue reloading another day. The less distractions, the better.

Inspection and Selection of Cases. The case is the package everything goes into. A good case is essential. Try to get all cases from the same company or arsenal. For best results segregate all cases by company, date, or arsenal. Get one lot of cases and start your inspection.

Any of the following faults should cause the case to be discarded:

1. Cracks and splits

2. Dents in the shoulder

3. Bent heads to the rear of the extraction groove on rimless cartridges

4. Evidence of leaking primers

5. Excessive corrosion

Inspect the inside of the case for any foreign material. Next, wipe all cases to remove any dirt or grit; this also gives you another look at the cases. Each time you handle a case, look at it. You might see a crack or split you overlooked on your first inspection. After all cases you plan to reload have been inspected and cleaned, put a light coat of lubricant on them. This can be a good resizing lubricant or lanolin. You can either put this on a stamp pad and roll the cases on it or wipe it on with a soaked rag. Remember not too much and none on the shoulder. Just apply a little on the neck and case body. Place these aside so they will not pick up any dirt or grit.

Setting Up and Use of the Resizing Die. Refer to figure 15-14. The parts and their functions are briefly explained in the accompanying legends:

A. Complete decapping and expanding unit.

B. Extra large precision-made lock ring.

C. Vent hole properly placed to prevent air and grease from creasing or denting cartridge case during the resizing operation.

D. Set screw with a wall of lead ahead of it to prevent damage to the die threads when set screw is tightened.

E. Large lock ring included with each die body. Used when adjusting the die to its correct position.

F. Die body is hardened steel, carefully machined, threaded, knurled, and the inside reamed and polished with great care.

G. Expander is hardened, ground, threaded, and held to precision dimensions.

H. Decapping pin; hardened and tempered, easily replaceable. Held in alignment by the expander nipple which is tightly threaded over the tip of the slotted decapping rod, locking it in place.

Place the handle of the reloading press in the position that puts the shell holder closest to the top of the press. Screw the die in the press until it is approximately 1/8" from the shell holder. Lock with the lock nut. Screw the decapping rod down until the decapping pin extends approximately 1/4" below the die body. Lock the lock nut on the rod. Check to insure that this is the proper setting. Place one lubricated case in the shell holder and operate the lever to decap the primer and resize the case. Remove the case, wipe clean, and place in the case length gauge (cylindrical steel type). Check to see if the head of the case comes between the upper and lower level on the bottom end. If it is too far into the gauge you must back the die off some as you have pushed the shoulder back. If it protrudes above the upper level you must screw the die into the press more. See that the primer has been punched out as required. Remember to do this checking with the first few cases. If you don't check now and have an improperly adjusted die, you might have to do them all over again. If your die was set too low and pushed the shoulder back, your only course is to discard them. After you have checked the first few, you do not need to check the rest if you have set the lock nut properly. Place each case in the shell holder, run the ram all the way up, place the new primer in the primer arm, push the primer arm into the ram, and lower the ram far enough to seat the new primer. This is largely a matter of feel and practice. Next, run the ram up a small amount to let the primer arm spring out, then lower the ram all the way and remove the case. Check the primer for proper depth. The primer cup should be seated into the primer pocket sufficiently deep so that it does not extend above the head of the cartridge. This may be checked with a straight edge or by placing the primed case on a flat surface and checking to see if the case rocks. If it rocks, this indicates the primer must be seated deeper. If the primer is seated too deep the primer cup will show signs of being deformed. If the primer cup is deformed even slightly it will give poor ignition. Do this with all the cases you plan to reload in this session.

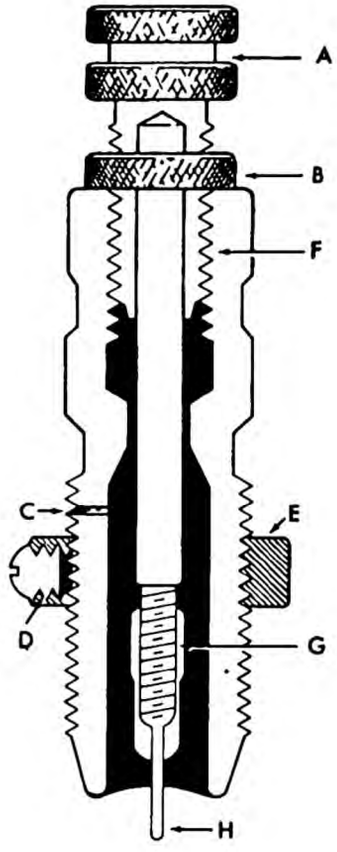

Figure 15-14. Resizing die.

Checking Case Length and Headspace. After completing the resizing, decapping, and repriming, wipe all the cases dry. Place each one in the combination headspace and case length gauge. First check to see if the head comes within the maximum and minimum headspace levels. Next, keeping the case tightly pressed in the gauge, check to see if the case

length comes within the two levels at the top. If it does, fine; if it is too short, discard it. If it is too long, place it to one side to be trimmed. Do this to all the cases.

Case Trimming and Deburring. Take all the cases that are too long and place by the case trimmer. Insert one case into the collet with the lock backed off and push the pilot into the mouth of the case; tighten the lock on the collet to lock the case in the collet. There are two adjustments on the crank end of the case trimmer that control how much you cut from the case. The large ring is the coarse adjustment; loosen the lock screw and push this toward the case until it hits the body of the trimmer. This stops the blades from moving further into the case. The finer adjustment on the coarse ring is then backed out slightly. This will allow the blades to cut off a small amount from the case neck. Turn the handle until it turns free. Remove the case and check if you have removed enough from the case by the case length gauge. If you have, run all the cases through the trimmer. You do not have to make further adjustments, regardless of case length. If not enough has been removed, back the finer adjustment screw out a little more, crank and recheck the case. Do this until the case length comes within levels on the gauge. Next, take the deburring tool and make approximately one turn on the inside of the case neck with the pointed end and one twist with the other end on the outside of the neck. This will remove any inside or outside burr made by the case trimmer.

Measuring Powder. For the most accurate ammunition use both the powder measure and powder scale. First set up the powder scale in a wind-free area near the powder measure. Zero this scale carefully. This is done by placing both sliding segments of the beam on zero and insuring that the pointer rests at zero when it has stopped swinging. Do this with the pan in place. Next, set the scale weights to measure the desired load. Normally, the measurements on the left are in 5 grain increments, those on the right in 1/10 of a grain. Make sure your scale is properly calibrated before you set it. Fill the powder measure with the desired powder and adjust the knob to throw a charge that will balance the scale. This takes time and patience. Remember, to throw consistent charges with a measure, you must hit the stop with the same force each time. Make sure each charge is weighed before dumping it into the case. As you pour the powder in the case, place an inverted bullet in each case. This will help to overcome the possibilities of putting a double charge in any case and prevent spilling of the powder. Put the proper powder in all the cases at this time.

Seating the Bullet. (See fig. 15-15.) The components and a brief explanation of their functions are included in the legends.

I. Bullet seating stem. Precision-made for correct alignment and adjustable to control bullet seating depth.

J. Set screw with a wall of lead ahead of it to prevent damage to the die threads when set screw is tightened.

K. Lock ring included with each die body. Used when adjusting the die to its correct position.

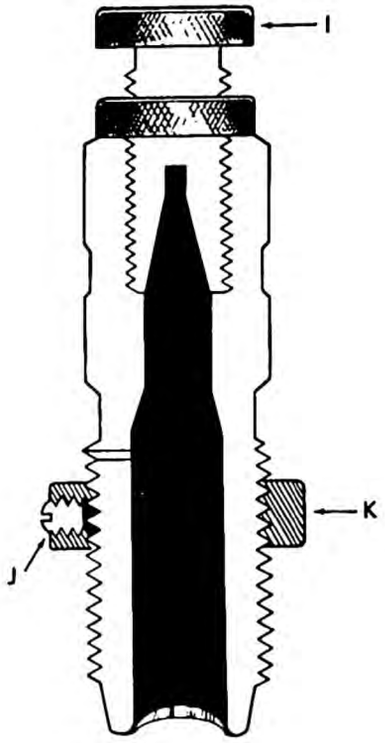

Figure 15-15. Bullet seating die.

Remove the resizing die from the press and install the seating die (fig. 15-15). This is not set down as deep as the sizing die. About 1/4" from the top of the shell holder is average. Lock the die in place with the lock nut. Back the seating adjusting screw out. The best procedure is to use a completed round of ammunition to adjust the seating die. Place the round in the shell holder and run the ram up. Next, run the seating adjusting screw down until it touches the bullet of the completed round. Lock the lock nut. Remove the round from the press. Place each case in the shell holder and insert a bullet in the case neck; run the ram up and seat the bullet. Do this to all your cases. The final step is another inspection. It is best to rewipe the case while doing this. Inspect the round for proper bullet depth, the case for cracks, and the primer for proper seating.

SAFETY

Although reloading is comparatively simple, the novice should not undertake this project without the advice or supervision of an experienced reloader. Further, in planning for your loads, you should always consult a reloading manual. These manuals have an established check list for different loads and should be adhered to if the full advantage of handloading is to be realized.

RELOADING REFERENCES

1. Complete Guide to Handloading—Sharpe
2. NRA Illustrated Reloading Handbook—NRA
3. Speer Reloading Manual—Speer Product Company
4. Speer Reloading Manual for Wildcat Cartridges—Speer Product Company
5. Ideal Reloading Handbook—Lyman Company
6. The Ultimate in Rifle Precision—Whelan

SUMMARY QUESTIONS

1. Name four advantages of handloading.

2. What factors should be taken into consideration when selecting primers?

3. What do you look for on initial inspection of a cartridge case?

4. What is the purpose of a case length gauge?

5. What is the deburring tool used for?

6. How important is the Bullet and Powder Scale to handloading?

7. What is the reason for final inspection of a cartridge?

INTRODUCTION TO RIFLE RELOADING

This workbook has been prepared to give you experience in using commercially prepared reloading tables.

Much experimentation has gone into assembling the data shown in the attached tables. Reloading, if handled respectfully, can be quite profitable and enjoyable; however, it can also be deadly.

Reloading tables furnish you with information on safe, practical bullet-powder combinations that can be used with assurance provided the weapon is in safe working condition. Always keep in mind that extreme deviation from these loading tables should be avoided.

In this workbook, you are given several situations in which you must use the tables to arrive at a solution.



RELOADING TABLE

.30/06

Case Length 2.494 Diam. of Rim .469 Diam. of Shoulder .433 Case Length with Bul. 3.34 Diam. of Base .466 Diam. of Neck .336 Jacketed Bul. .308 Cast Bul. .311 Large Rifle Primer

	Powder:	2400	4227	4759	4198	Hi-Vel	4895	3031	4064	4320	4350	Unique
110 GRAIN CAST GAS CHECK	max. grs.	24.0		22.0	24.0							
	max. vel.	2260		2350	2400							
	sug. grs.	18.0		14.0	16.0							9.0
	sug. vel.	1700		1500	1600							1400
120 GRAIN CAST GAS CHECK	max. grs	23.1	21.0	21.0	25.0							
	max. vel.	2200	2180	2060	2050							
	sug. grs.	20.0	18.0	14.0	20.0		25.0					
	sug. vel.	1900	2000	1375	1800		1800					
150 GRAIN CAST GAS CHECK	max. grs.	26.0	25.0	19.0	27.0							
	max. vel.	2275	2100	1713	1985							
	sug. grs.	20.0	20.0	12.0	20.0		35.0	35.0	36.0			10.0
	sug. vel.	1800	1700	1100	1400		1950	1950	1950			1500
165 GRAIN CAST GAS CHECK	max. grs.	24.0	25.0	20.0	27.0	35.0	35.0	35.0				19.3
	max. vel.	1965	1900	1750	1900	2120	1900	1900				1940
	sug. grs.	19.7	15.0	18.0	23.0	30.0	25.0					17.0
	sug. vel.	1620	1400	1600	1700	1820	1700					1815
180 GRAIN CAST GAS CHECK	max. grs.		23.0	25.0	33.0	35.0	35.0	38.0	36.0			
	max. vel.		1950	2175	2260	2200	1985	2155	1970			
	sug. grs.		14.0	20.0	25.0	30.0	27.0	27.0	27.0			19.3
	sug. vel.		1400	1725	1575	1800	1650	1675	1525			1785
190 GRAIN CAST GAS CHECK	max. grs.		18.0	23.0	30.0	33.0	35.0					
	max. vel.		1800	2150	2250	2190	2000					
	sug. grs.		12.0	17.0	26.0	25.0	28.0					15.0
	sug. vel.		1330	1400	1750	1700	1700					1650

	Powder:	2400	4227	4759	4198	Hi-Vel	4895	3031	4064	4320	4350	Unique
210 GRAIN CAST GAS CHECK	max. grs.					34.0	38.0	38.0	40.0			
	max. vel.					2060	1950	2000	2000			
	sug. grs.	16.0	16.0	18.0	20.0	25.0	30.0	30.0	35.0			15.0
	sug. vel.	1500	1400	1450	1575	1580	1600	1650	1750			1530
110 GRAIN JACKETED	max. grs.					49.0	52.0	53.5	55.0	56.5	60.0	19.8
	max. vel.					3078	3200	3310	3285	3345	3300	2320
	sug. grs.					46.8	45.0	45.0	50.0	52.0	55.0	15.0
	sug. vel.					2976	2700	2800	2990	3075	3000	1960
125 GRAIN JACKETED	max. grs.					45.0	53.0	53.0	51.0	55.0	59.0	19.0
	max. vel.					3100	3190	3200	3275	3250	3200	2200
	sug. grs.					30.0	50.0	50.0	51.0	52.0	53.0	14.5
	sug. vel.					1925	2975	2990	3000	3000	3000	1750
150 AND 153 GRAIN JACKETED	max. grs.					49.0	50.0	50.0	53.0	53.5	58.0	19.5
	max. vel.					2980	2900	3060	3070	3080	2900	2050
	sug. grs.					42.0	45.0	45.0	46.0	48.0	53.0	14.0
	sug. vel.					2610	2700	2750	2660	2745	2500	1640
173 AND 180 GRAIN JACKETED	max. grs.					46.2	44.0	45.5	48.0	50.5	57.0	18.4
	max. vel.					2755	2700	2750	2765	2785	2761	1840
	sug. grs.					36.4	44.0	45.0	45.0	45.0	52.0	13.0
	sug. vel.					2200	2700	2700	2600	2480	2520	1430
220 GRAIN JACKETED	max. grs.					43.0	43.0	44.0	45.0	45.0	56.0	17.9
	max. vel.					2400	2350	2400	2400	2425	2595	1495
	sug. grs.					38.0	41.0	41.0	41.0	42.0	52.0	12.0
	sug. vel.					2140	2050	2100	2100	2115	2410	1090

The following problems are based on information contained in the reloading table for the caliber .30-06 cartridge shown on page 15.

1. What is the case length for the cal. . 30-06 cartridge?

2. How many grains of #4895 powder are required to propel a 110 grain jacketed bullet at a velocity of 3200 feet per second?

3. You wish to propel a 150 grain jacketed bullet at a maximum velocity of 3080 F.P.S. What type of powder would you use? How many grains of powder are required?

4. If you wished to propel a 150 grain jacketed bullet at 2900 feet per second, which of the two powders listed in the reloading table would give the most consistent accuracy? Why?

5. Why is the diameter of a cast lead bullet for the . 30-06. 311 in diameter while the jacketed bullet is . 308 in diameter?

6. What is one advantage of a turret type reloading press?

7. What will happen if you get lubricant inside the cartridge?

8. What is an oil dent?

9. What are four advantages of a reloading chart as shown on page 15?

10. Why is there no reloading data in the table for #4320 and #4350 powder using cast bullets?

11. Why is there no reloading data in the table for #2400, #4227, #4759 & #4198 powders using jacketed bullets?

UNIT 2

PREMARKSMANSHIP TRAINING

OBJECTIVE

To understand the five steps of preparatory marksmanship; to be able to perform the preparatory steps of marksmanship during dry-fire exercises.

INTRODUCTION

In order to teach rifle marksmanship effectively, it is necessary that you understand these five elements: Sighting and Aiming, Positions, Breath Control and Trigger Squeeze, Rapid-Fire Exercises, and Sight Adjustments. It is imperative that the first four elements be taught in the order listed as each step depends upon material taught in the preceding step. As the fifth element is not based on material taught in any of the first four elements, it may be taught at any time before range firing is scheduled. For the purpose of this Study Guide, only the first four elements will be discussed. (Study Guide, AIR75330-II-3, includes the fifth element, Sight Adjustments, p. 3-22.)

SIGHTING AND AIMING

Sight Alignment. In order to obtain correct sight alignment, the front sight must be centered in the rear aperture as shown in figure 4-1.

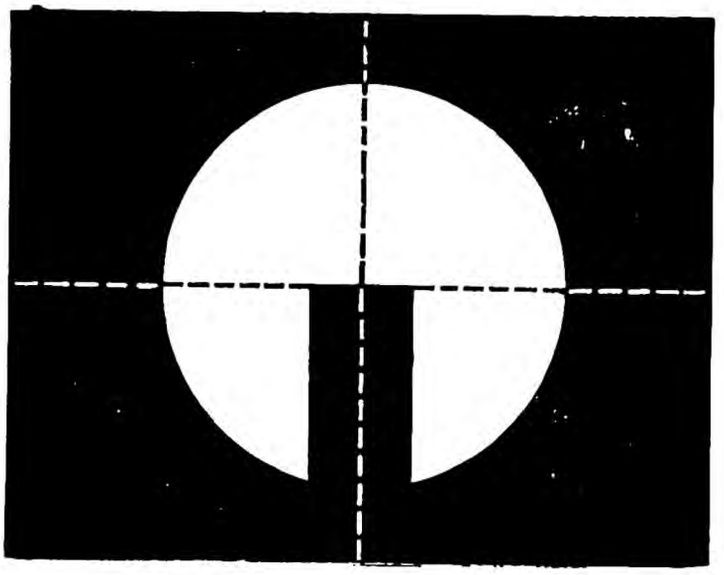

Figure 4-1. Sight alignment.

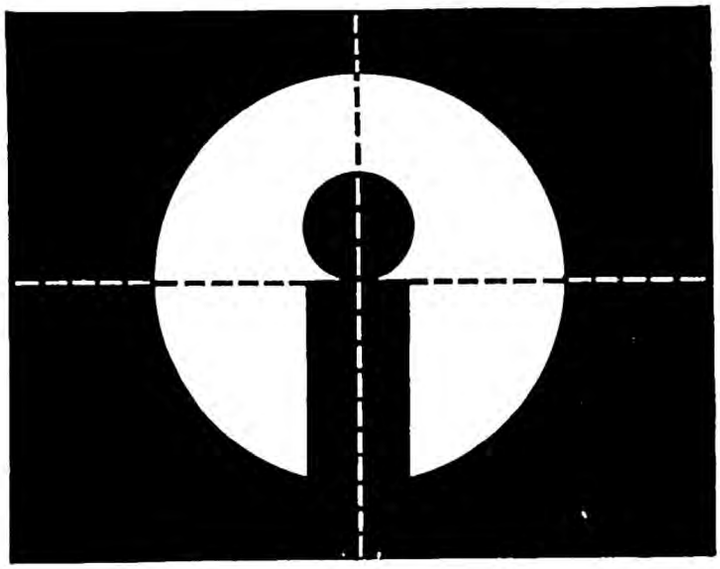

Figure 4-2. Sight picture.

Notice that an imaginary horizontal line passes through the exact center of the rear aperture, touching the top of the front sight blade. An imaginary vertical line divides the front sight blade in half.

Sight Picture. To obtain correct sight picture, the bull's-eye is added to correct sight alignment. The bull's-eye should be centered over the front sight and should appear to be barely touching as illustrated in figure 4-2.

It is of the utmost importance that correct sight alignment be maintained rather than correct sight picture. An error in sight alignment is amplified as the range increases, whereas an error in sight picture remains constant, regardless of the range.

Sighting and Aiming Bar. The sighting and aiming bar (fig. 4-3) is an ideal training aid for teaching sight alignment and sight picture. The front and rear sights on the bar represent the front and rear sights on a rifle. The rear sight and the target are movable, allowing you to make changes in sight alignment and sight picture.

To use the sighting and aiming bar, the class should be divided into coach and pupil teams. Have the pupil set up a correct sight alignment. The coach and the instructor will then check to see that the pupil has established correct sight alignment (fig. 4-4).

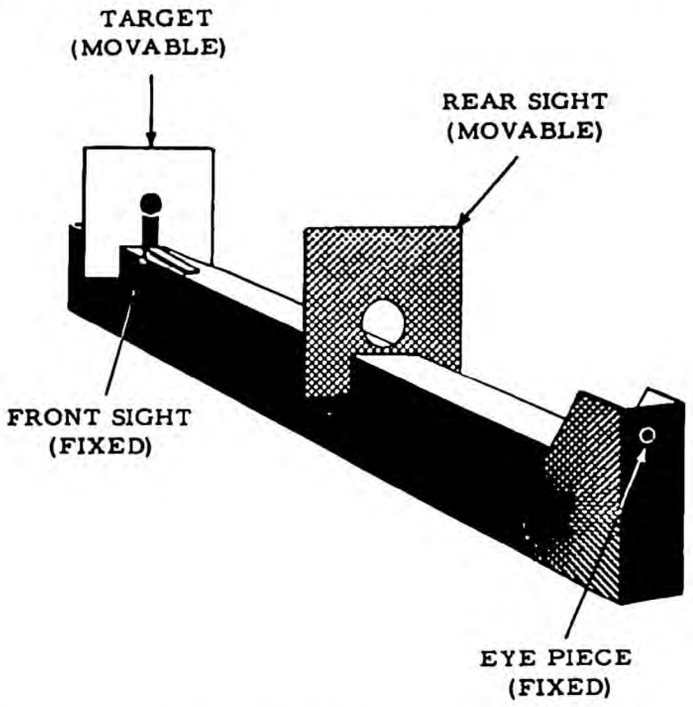

Figure 4-3. Sighting and aiming bar.

When correct sight alignment has been obtained, the pupil will add the disk representing the target and set up a correct sight picture (fig. 4-5).

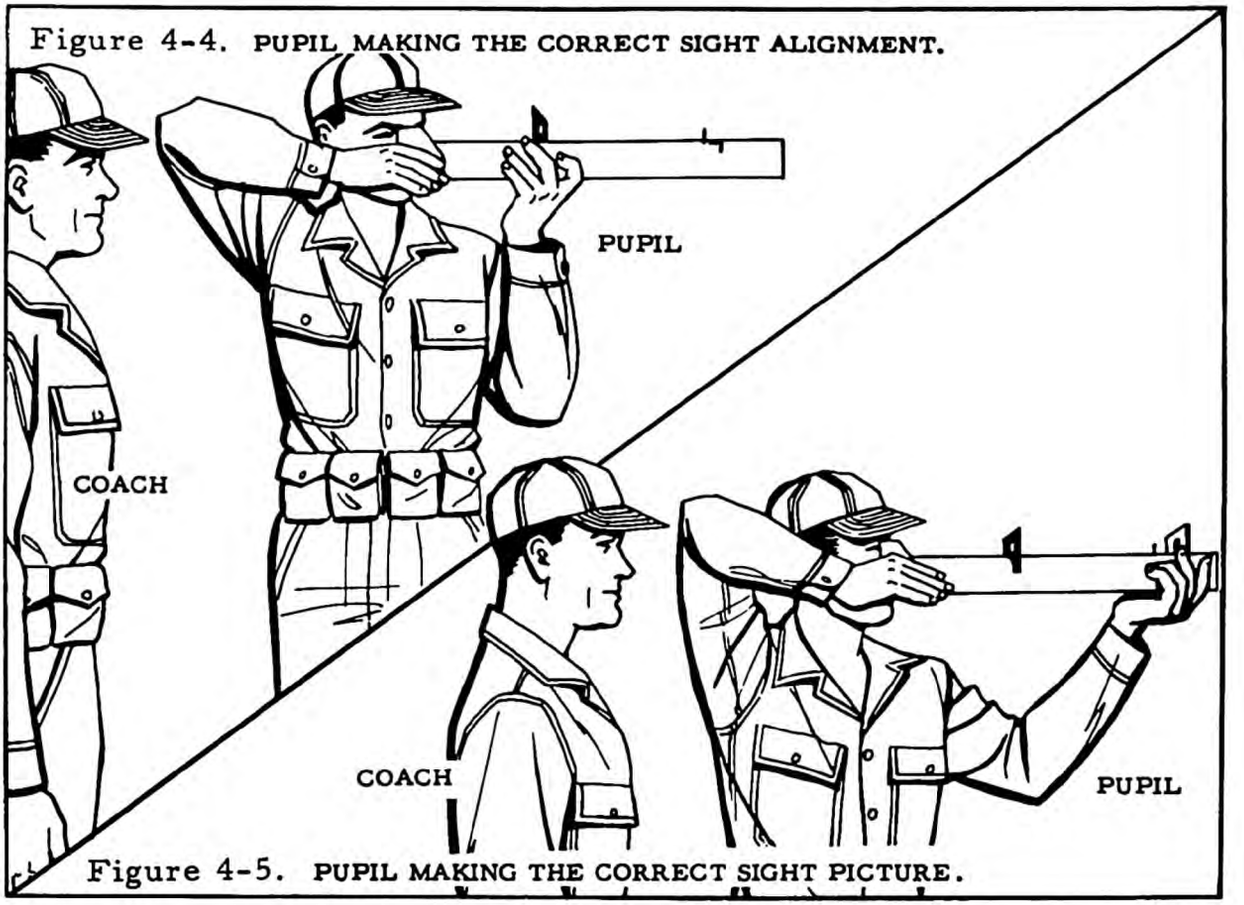

Figure 4-4. PUPIL MAKING THE CORRECT SIGHT ALIGNMENT.

Figure 4-5. PUPIL MAKING THE CORRECT SIGHT PICTURE.

Figures 4-4 and 4-5.

When correct sight alignment and correct sight picture have been obtained by the pupil, the coach will then set up errors in sight alignment and sight picture and the student will correct these errors. Each student will be required to perform as a coach and pupil.

Triangulation. Triangulation is a means for the student to use the rifle to practice what has previously been taught in sighting and aiming. It also serves as means for the instructor to evaluate the student on sighting and aiming before any range firing is conducted. This exercise is conducted by dividing the class into three groups. Each group will perform duty as a marker, coach and a pupil, alternating these positions between exercises.

To begin the first triangulation exercise, your first step is to blacken the sights on your rifle, using the carbide lamp. The rear sights will be run up twelve clicks and the carbine sights will be set at 100 yards (fig. 4-6).

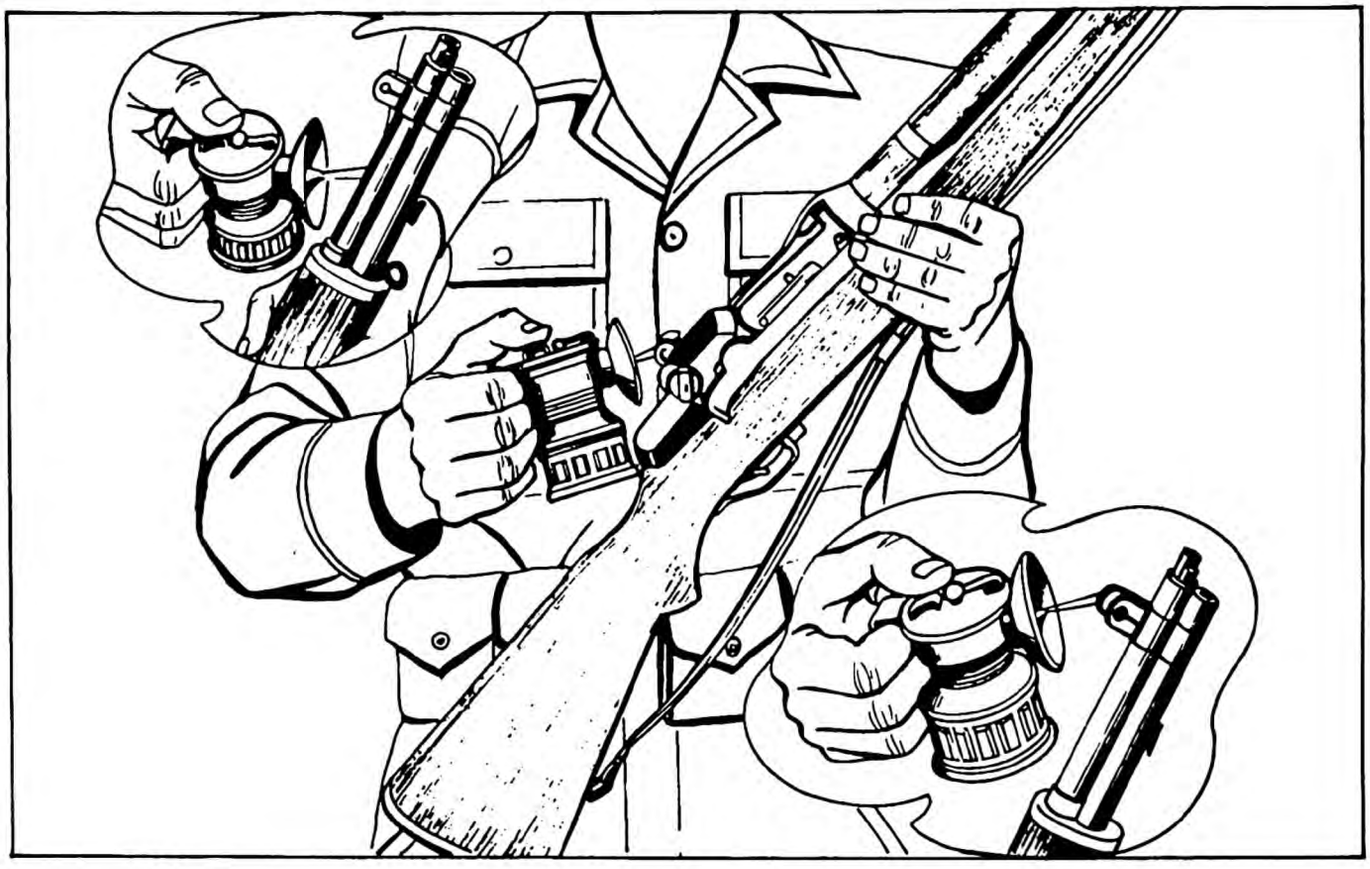

Figure 4-6. Blackening the sights.

Place the rifle in a rifle rest and the pupil will assume the prone position behind the weapon, making sure that his face does not move the weapon (fig. 4-7). The coach will position himself where he can hear the pupil and give signals to the marker. The marker will sit on the marking box in such a way as to enable him to work the aiming disc (fig. 4-8).

The pupil will tell the coach and the coach will signal the marker to move the disc, using a system of hand signals. The hand is turned with the palm facing in the direction you wish to move the disc. To have the marker hold, turn the palm of the hand toward the marker. To mark, the marker will insert a sharpened pencil through the hole in the center of the disc and make a mark on the paper tacked to the box. This will be done three times. The three marks on the paper should form a triangle.

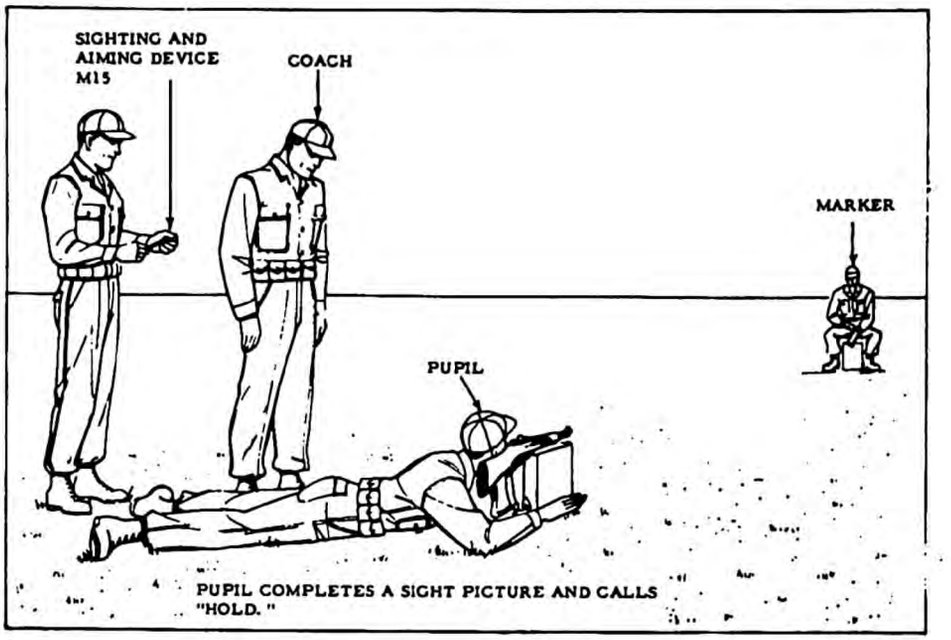

Figure 4-7. Making a shot group.

This triangle should not exceed 1/4" measuring from the two farthest points. Unsatisfactory shot groups are either too high or too wide and are caused by a series of errors as illustrated in figure 4-9. Although not previously mentioned in this Study Guide, triangulation is normally conducted at fifty feet, using 7/8" bull's-eye. It can be conducted at any range, however, the bull's-eye must be increased in proportion to the distance of the range range.

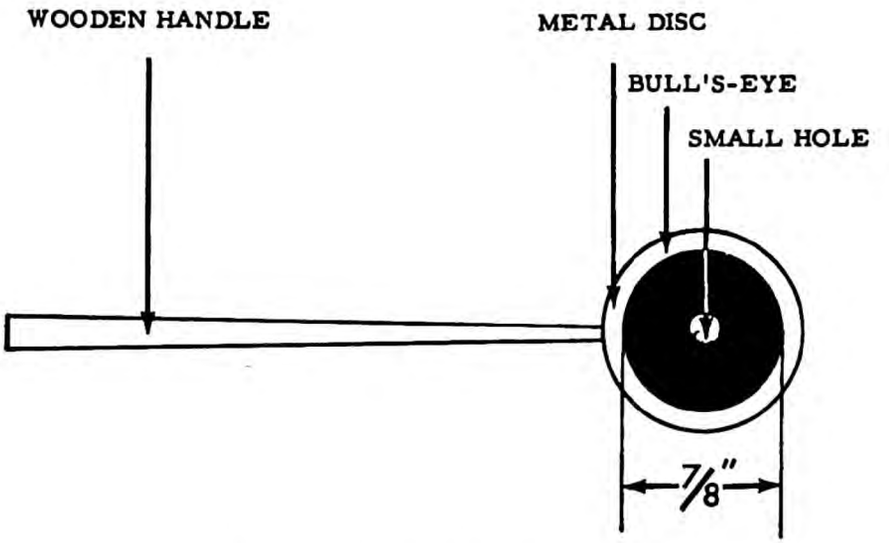

Figure 4-8. Aiming disc.

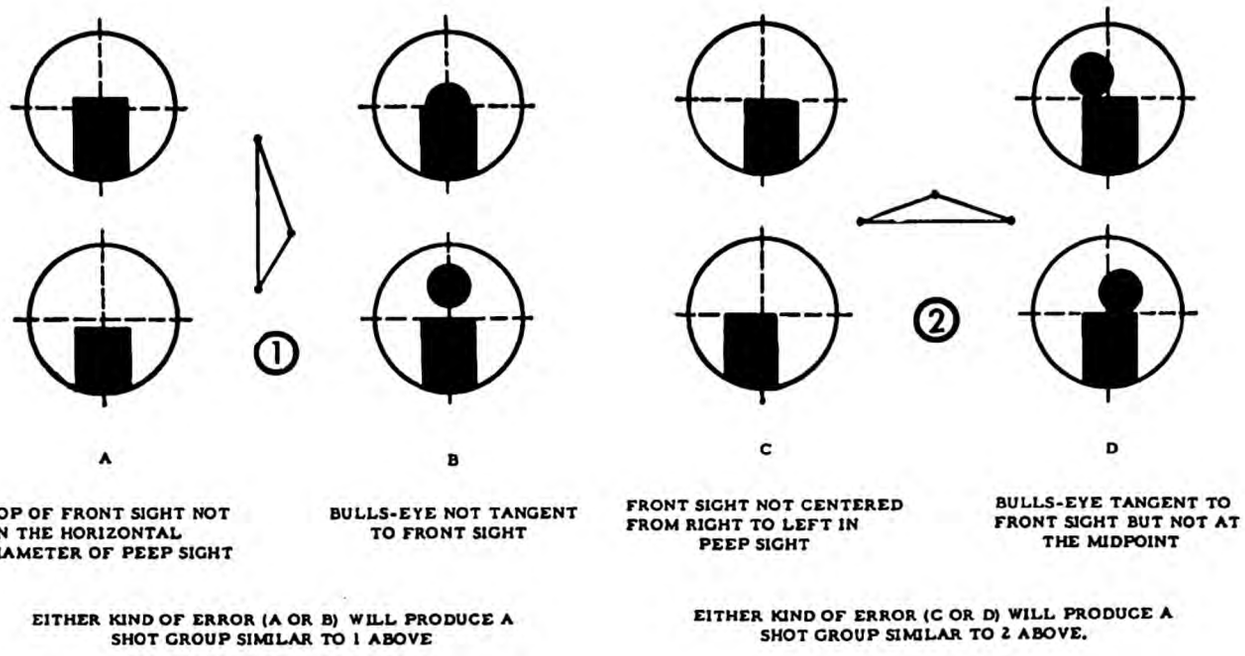

Figure 4-9. Errors causing unsatisfactory shot groups.

POSITIONS

The second element of preparatory marksmanship is the teaching of the prone, sitting, kneeling, and standing positions; adjusting the sling and the method of controlling your breath while aiming.

Adjusting the Sling. The sling is used for support in all positions except standing. When firing in the standing position, the sling will be placed in the parade position. Figure 4-10 illustrates how a well-adjusted sling furnishes support.

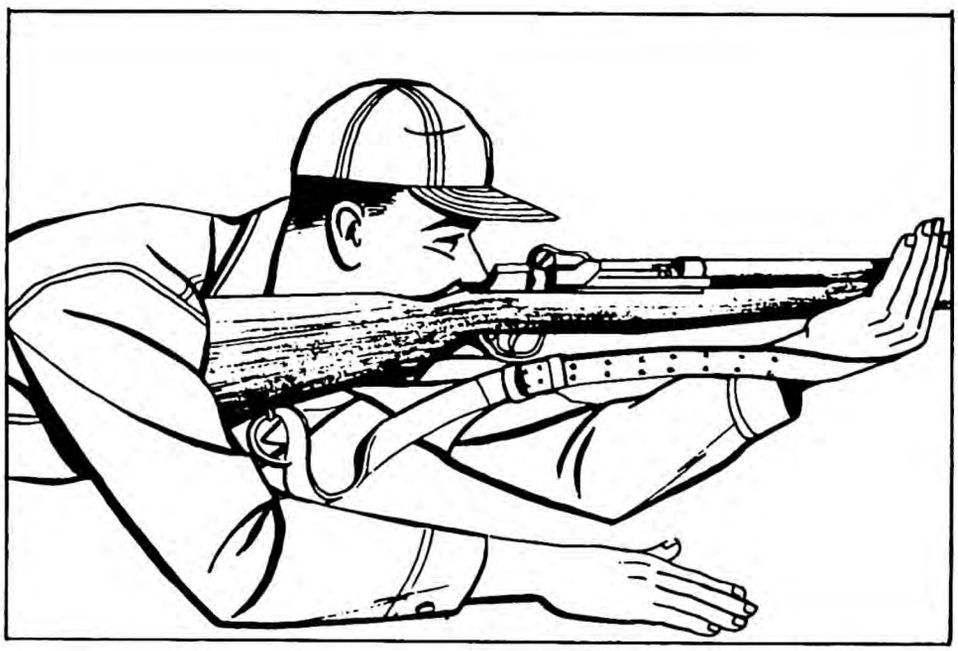

Figure 4-10. A correct sling adjustment holds the rifle into the shoulder.

In figures 4-11(a), (b), and (c), the proper way to adjust and place the sling on your arm is illustrated. You will find through experience that the sling tension will be different for each position.

Breathing. Obviously if your chest and back are moving during breathing, your rifle will move up and down as you inhale and exhale. To control this movement of your rifle, take a breath of air, let some of the air out and lock remaining air in your throat (fig. 4-12). Hold your breath naturally. If you

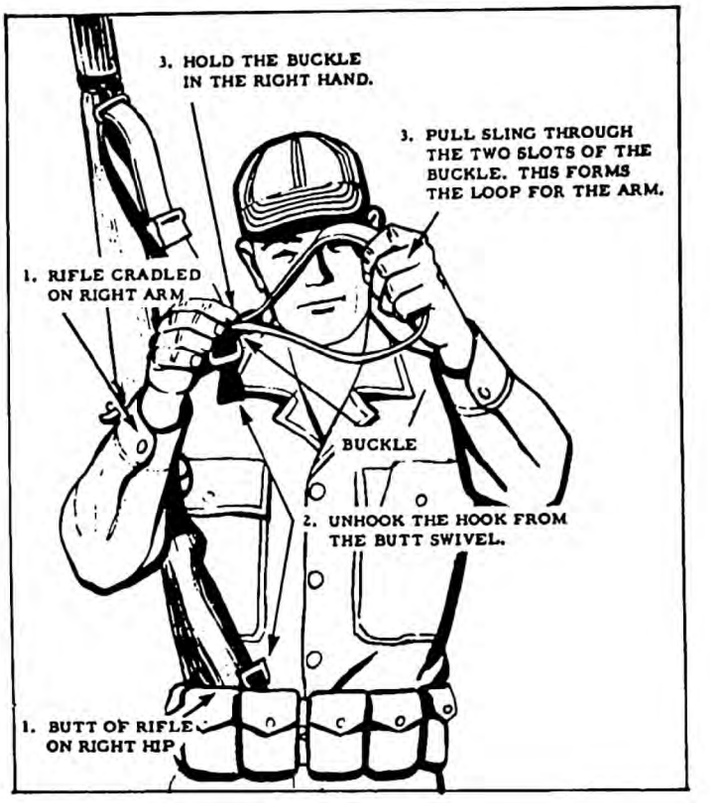

Figure 4-11a. Adjusting the loop sling (web).

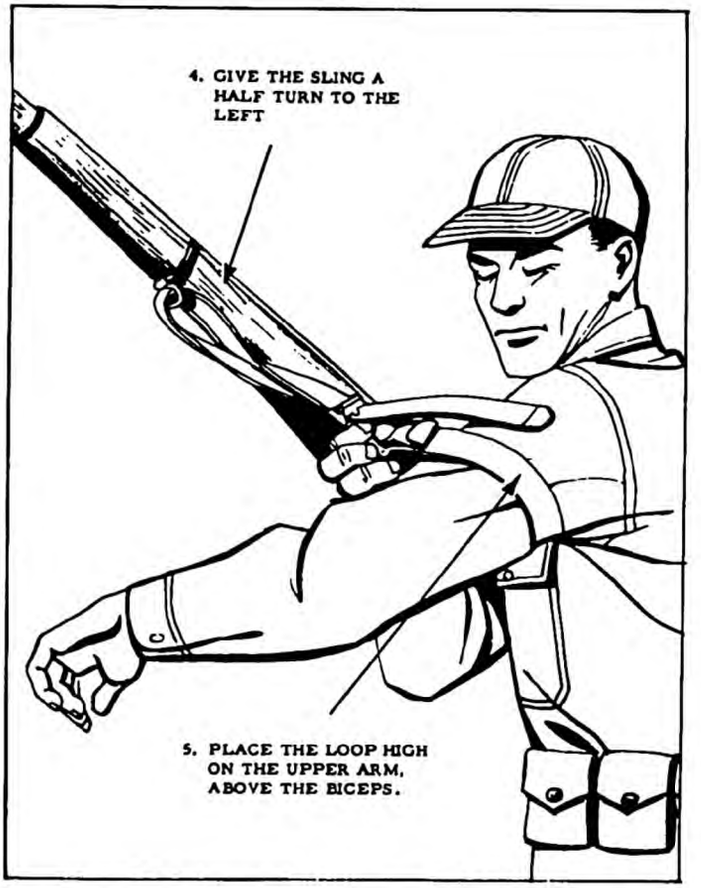

Figure 4-11b. Adjusting the loop sling (continued).

do not fire your shot in a reasonable length of time (8 -9 seconds), DO NOT attempt to fire. Take several breaths and start all over again. Do not tighten up. DO NOT allow your vision to become obscured.

Prone Position. This position is the most natural to assume, the steadiest, and the most comfortable. (See fig. 4-13). To be able to assume and maintain a good prone position, you must first adjust the sling for proper tension to furnish support. This is done by getting into a prone position and taking in or letting out the slack of the sling. You will have proper sling tension when you must force the weapon into the pocket of your shoulder. Once you have adjusted for sling tension, rise to the standing position.

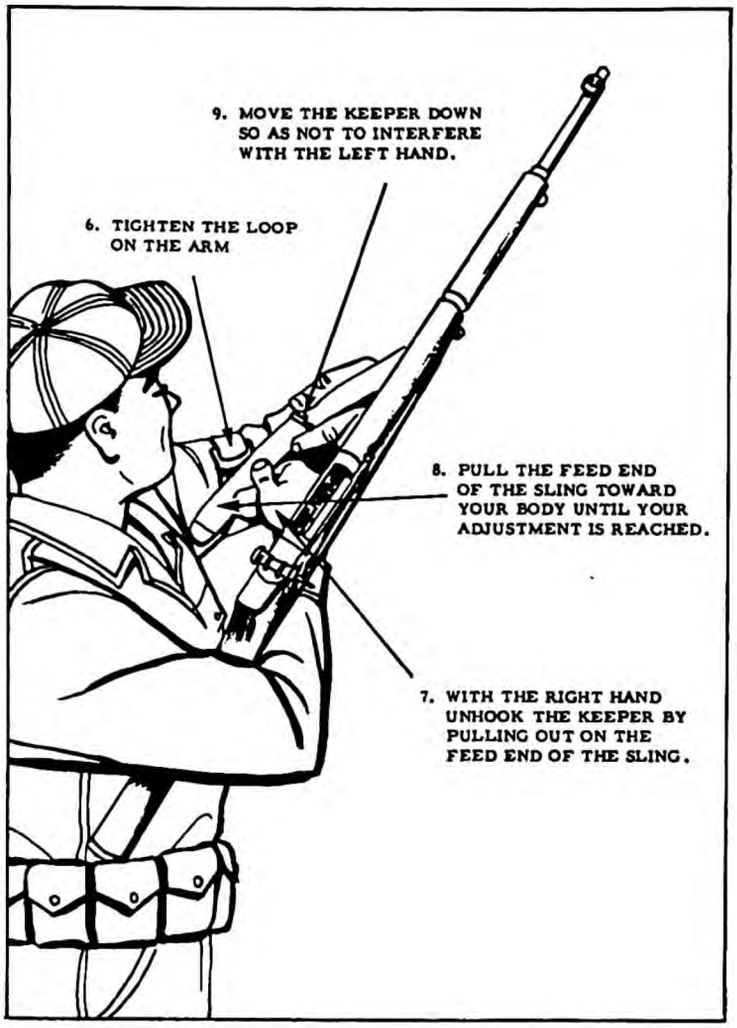

Figure 4-11c.

You are now ready for the prone position. Stand facing your target, with the left hand extended to the stock ferrule swivel and the right hand on the heel of the butt. Spread your feet a comfortable distance apart, shift your weight slightly to the rear and drop down to your knees (fig. 4-14). Place the toe of the butt about thirty inches in front of your right knee on a line from your right knee to the target (see fig. 4-15). It should be noted at this time that in assuming this position, the muzzle of the weapon can be pointing to a direction other than down range. Do not lose sight of which direction the muzzle is pointing -- ALWAYS KEEP IT DOWN RANGE. Finally, pivot on the rifle down onto your left side, placing the

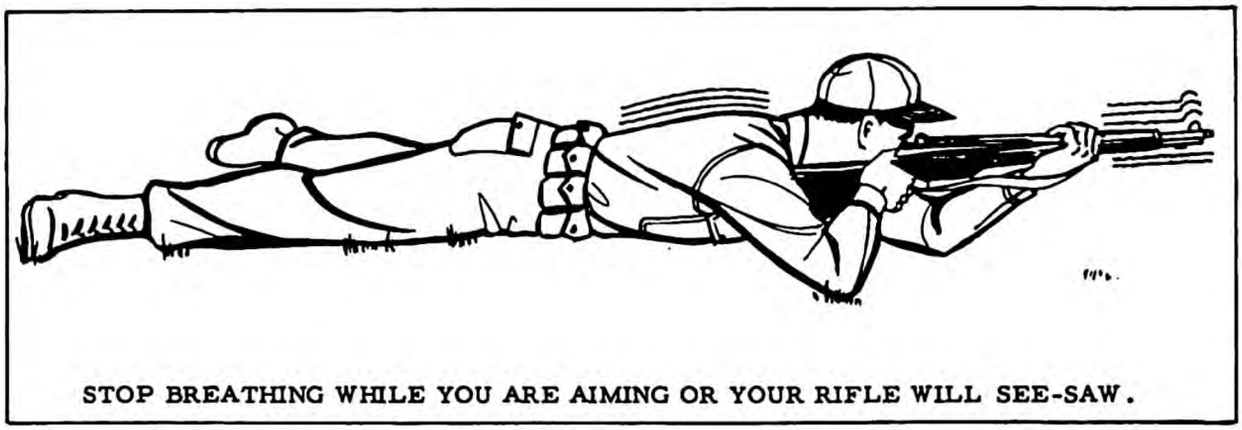

Figure 4-12

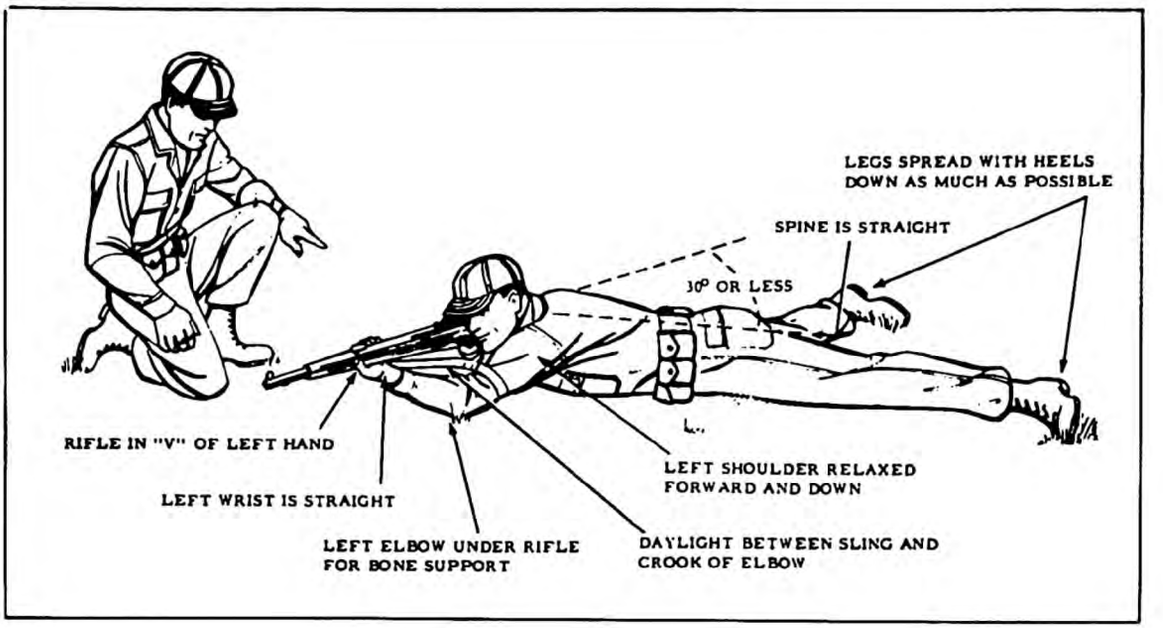

Figure 4-13. The prone position.

left elbow well inside and under the weapon. Force the butt of the weapon into your right shoulder, grasp the small of the stock with your right hand and lower the elbow to the ground so that the shoulders are level. Aim at your target.



Figure 4-14. Taking the prone position rapidly.

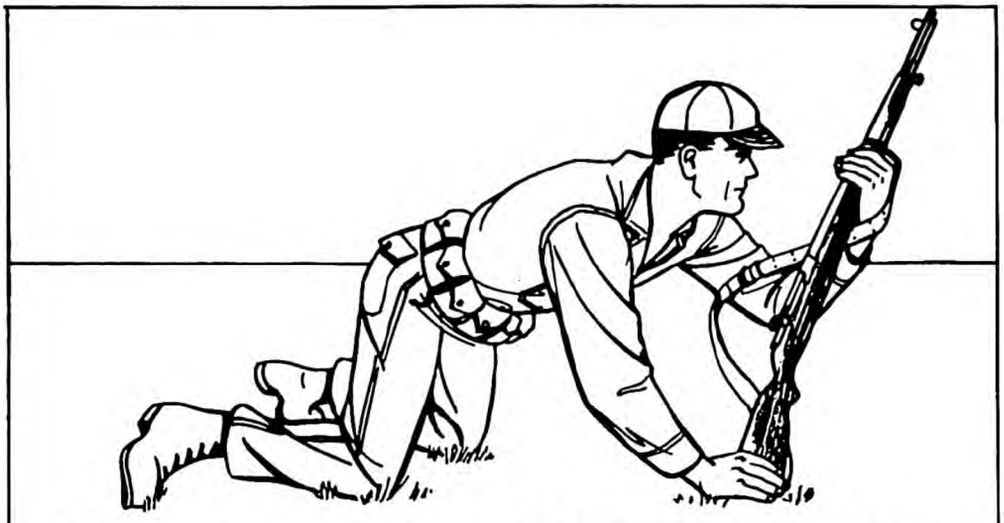

AT THE COUNT OF TWO, FALL FORWARD PLACING THE TOE OF THE BUTT OF THE RIFLE ON THE SPOT MARKED FOR IT. TWO.

Figure 4-15

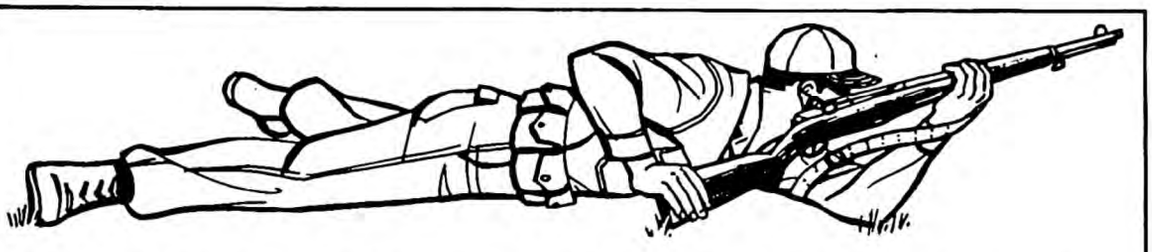

AT THE COUNT OF THREE, USING THE RIFLE AS SUPPORT, ROLL ONTO YOUR LEFT SIDE PLACING THE LEFT ELBOW ON THE SPOT MARKED FOR IT. THREE.

Figure 4-16



AT THE COUNT OF FOUR, FORCE THE BUTT OF THE RIFLE INTO THE POCKET OF THE RIGHT SHOULDER. FOUR.

Figure 4-17

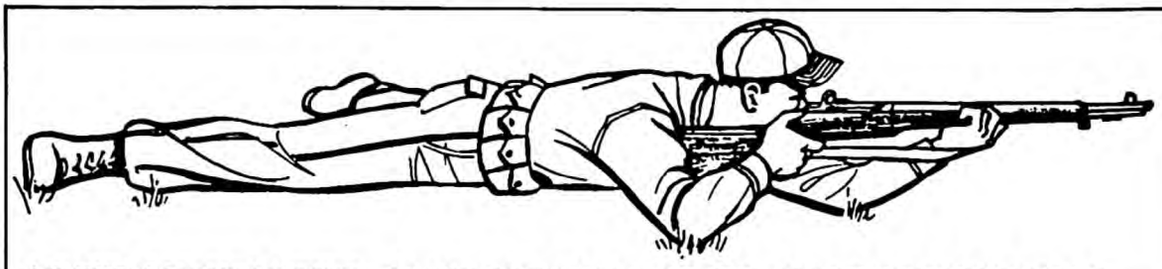

AT THE COUNT OF FIVE, GRASP THE SMALL OF THE STOCK WITH THE RIGHT HAND. PLACE THE RIGHT ELBOW ON THE SPOT MARKED FOR IT AND COMPLETE THE POSITION. FIVE.

Figure 4-18

These are the important features of the prone position (fig. 4-13):

a. The rifle rests in the "V" formed by the thumb and first finger and against the heel of the hand.

b. The left wrist is straight.

c. The left elbow is under the rifle (fig. 4-19).

d. The fingers and thumb of the left hand are relaxed.

e. The left hand is forward against the stock ferrule swivel.

f. Daylight is visible between the sling and the crook of the elbow.

g. The left shoulder is relaxed forward.

h. The spine is straight. The legs are spread a comfortable distance apart.

i. The toes are pointing outward. The heels, if possible without discomfort should touch the ground.

j. The angle made by the shooter's spine and the rifle is 30 degrees or less. The firer must be well behind the rifle, so that his weight will act against the recoil of the rifle and cause the muzzle to drop back into position after each shot.

k. The butt of the rifle is seated well into the pocket formed in the shoulder as the right elbow is moved forward.

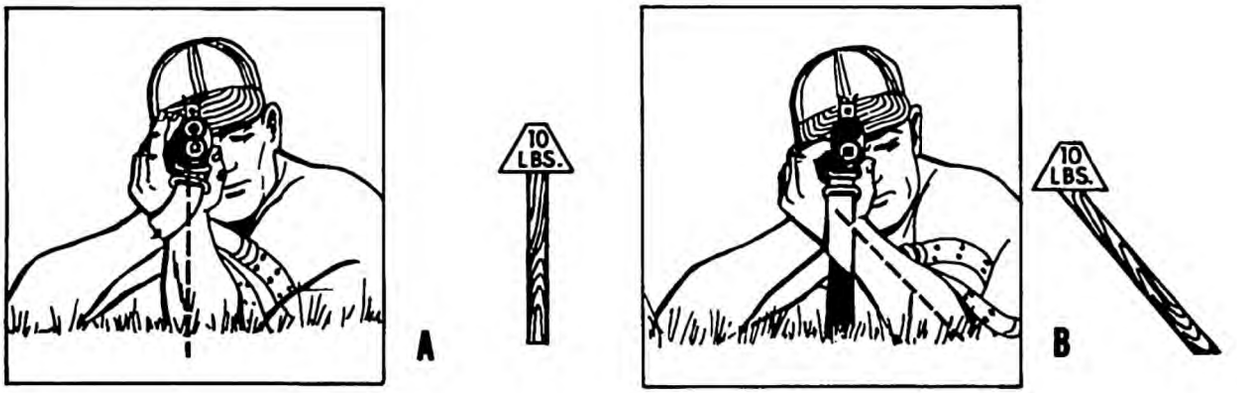

Figure 4-19. Bones, not muscular effort, support the rifle.

l. The right elbow is far enough out so that the shoulders are parallel with the ground.

m. The small of the stock is gripped firmly with the right hand, the thumb on top of or over the top of the stock. This will enable you to get a good spot weld.

n. The trigger finger, between the tip and the second joint, contacts trigger. No part of the trigger finger should touch the stock as this hinders proper trigger squeeze.

o. The neck is relaxed. The cheek should rest firmly against the stock and the thumb of the trigger hand.

p. The weight of the upper body is relaxed forward against the tension of the sling.

Errors in the prone position:

a. Body placed at too great an angle with rifle.

b. Right elbow too close to the body.

c. Left elbow not under the weapon.

d. Improper spot weld.

Kneeling Position. To assume the kneeling position, face your target. Hold the rifle with the left hand extended all the way forward to the stock ferrule swivel and the right hand on the rifle butt. Make a right face and place your left leg approximately 18" forward, the toe pointing toward your target. Sit on the right heel with the right buttock (fig. 4-20). Place the left elbow forward of the left knee (fig. 4-21). Force the rifle butt into your shoulder and grasp the small of the stock. The right elbow is horizontal or slightly below horizontal (fig. 4-22). Shift the weight forward onto the left leg and aim at your target.

These are the important features of the kneeling position (figs. 4-20, 4-21, and 4-22).

a. The firer kneels on his right knee (fig. 4-20).

b. Solid contact between the right heel and right buttock (fig. 4-20).

c. The rifle rests in the "V" formed by the thumb and first finger and on the heel of the left hand (fig. 4-21).

d. The left wrist straight (fig. 4-21).

e. The left elbow is directly under the rifle, <u>for bone support</u> (fig. 4-22).

f. The left elbow is several inches forward of the left knee; this moves the weight of the body forward (fig. 4-21).

g. Daylight can be seen between the sling and the crook of the elbow (fig. 4-21).

h. The left lower leg is vertical as viewed from the front (fig. 4-22).

i. The toes of the left foot point generally at the target (fig. 4-22).

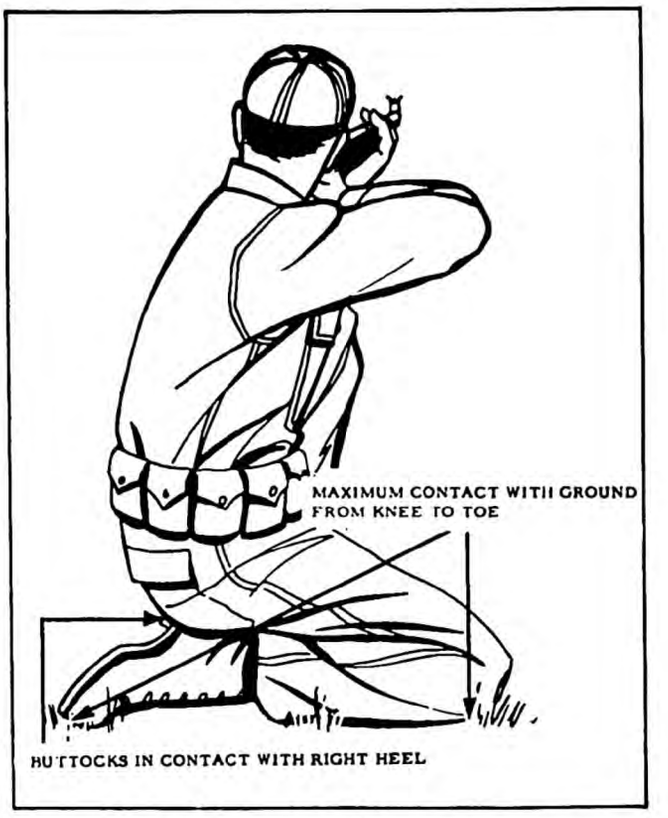

Figure 4-20. The kneeling position.

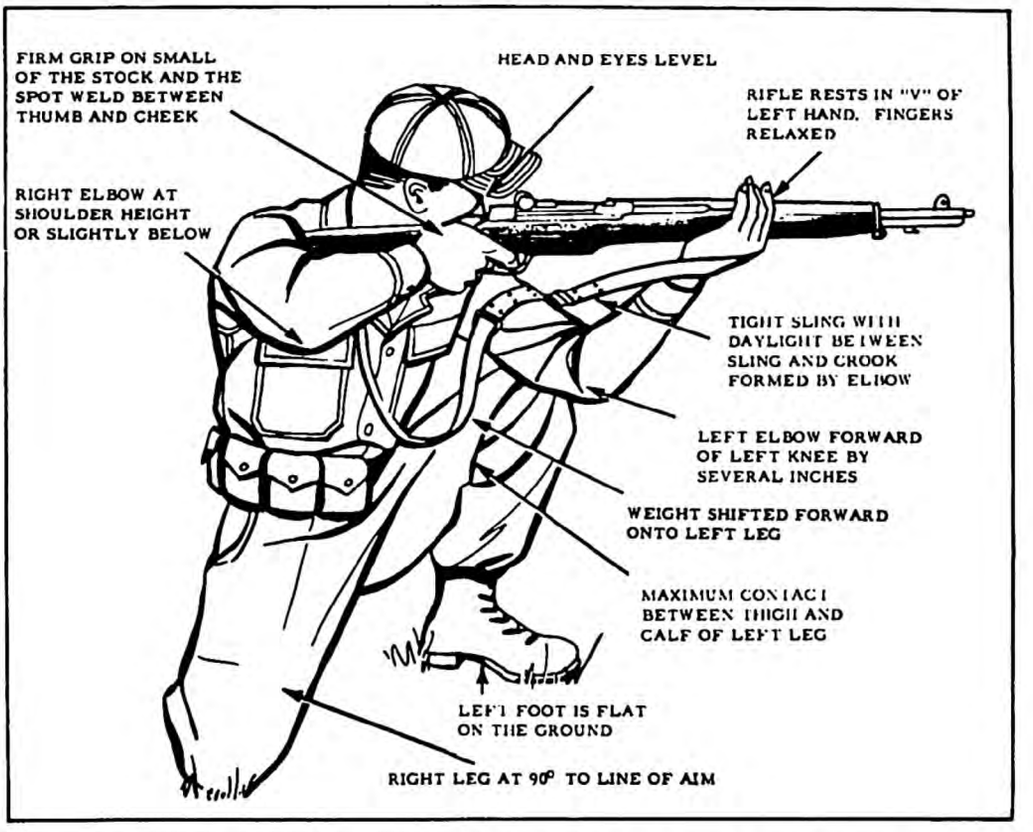

Figure 4-21. The kneeling position (continued).



Figure 4-22. The kneeling position (continued).

j. The left foot is drawn back, then the body weight is relaxed forward so that solid contact is made between the calf of the leg and the thigh. (fig. 4-20).

k. Notice the position of the right knee. It is placed so that the right thigh forms an angle of 90° with the line of aim. The entire surface of the lower leg, from knee to toe, is in contact with the ground. The weight of the body is forward. This takes most of the weight off the right leg and puts it on the left leg. The right leg now completes a solid three-point base. If the right leg forms an angle of less than 90°,, then the three-point base is reduced in size. If the angle is greater, the firer is straining the thigh muscles.

l. The grasp on the rifle by the right hand, the position of the cheek against the thumb of the firing hand, and the finger on the trigger are the same as for the prone position.

Errors in the kneeling position:

a. Sitting on the inside of the right foot. This throws the weight of the body too far to the rear.

b. Left elbow and knee not under the rifle. This will cause muscling of each shot as bone support is not being utilized to support the rifle.

c. Right thigh not at right angle to the line of aim.

d. Improper grip.

Sitting Position. This position is second to the prone position for steadiness. It is suitable for use when the prone position is not feasible, such as in high grass. To assume this position, half face to the right., spread your feet a comfortable distance apart and sit down, breaking your fall with the right hand and arm. Bend forward from the waist, placing the left upper arm on the flat part of the shinbone, the tip of the elbow crossing over the shinbone (fig. 4-23). Maximum contact should be made between the left upper arm and the shinbone. Force the rifle into your shoulder, take a firm grip on the small of the stock and block your right elbow in front of the right knee (fig. 4-24). Relax your body into the sling and aim at your target.

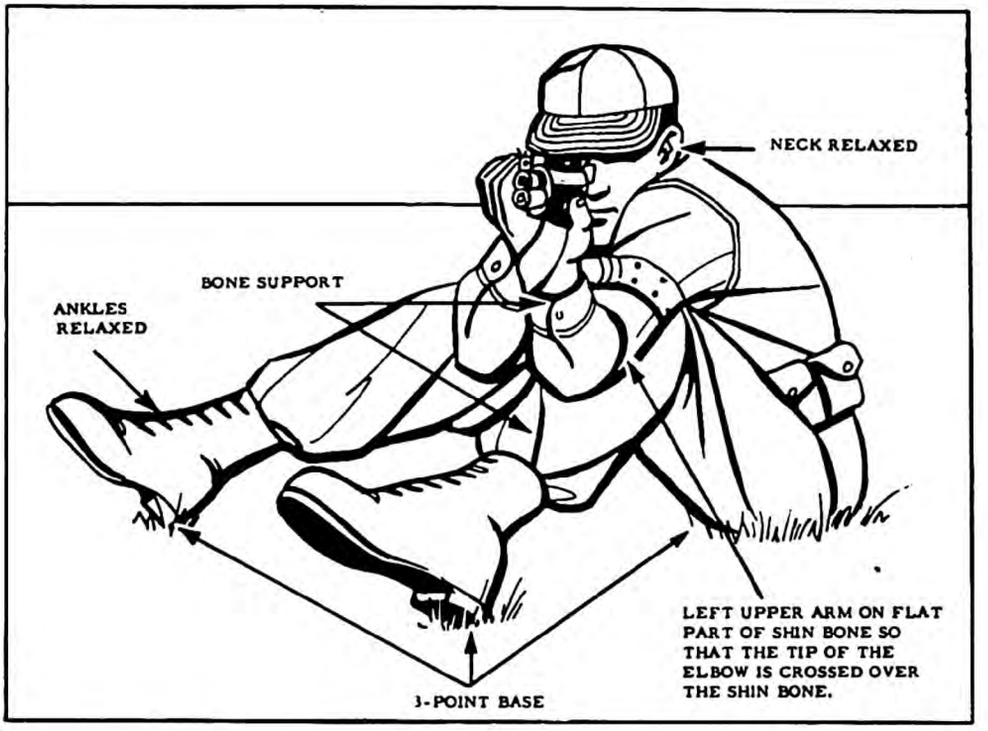

Figure 4-23. The sitting position

These are the important features of the sitting position (figs. 4-23 and 4-24).

a. The rifle rests in the "V" formed by the thumb and first finger and against the heel of the hand (fig. 4-23).

b. The left elbow is under the rifle; the left wrist is straight (fig. 4-24).

c. Daylight is visible between the sling and the crook of the elbow (fig. 4-24).

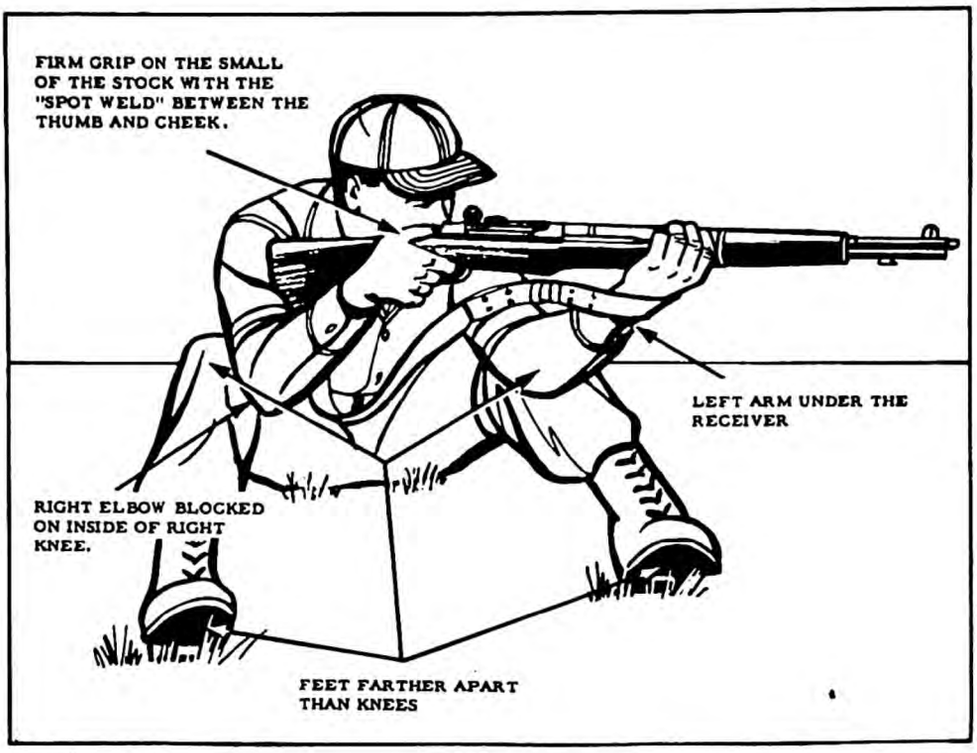

Figure 4-24. The sitting position.

d. The left upper arm is forward and down over the left knee, having several inches of contact with the flat part of the left shin, the tip of the elbow crossed over the shinbone (fig. 4-23).

e. The weight of the body is relaxed forward at the waist (fig. 4-23).

f. The feet are farther apart than the knees, with the feet relaxed forward at the ankles (fig. 4-24).

g. The weight of the upper part of the body is forward on the legs (fig 4-23).

h. The butt of the rifle is held in the pocket at the right shoulder by the tension of the sling (fig. 4-24).

i. The right arm is blocked by the right knee (fig. 4-24).

j. The grip on the small of the stock, the position of the trigger finger, and the spot weld between the cheek and thumb are the same as in the other positions (fig. 4-24).

Errors in the sitting position:

a. Tips of elbows resting on top of knees. (Point to point contact.)

b. Knees farther apart than the feet. This will cause muscular strain rather than relaxation.

c. Toes pointing up.

d. Left elbow not under the rifle.

e. Improper grip.

Standing Position. The standing position, which is also known as the offhand position, is normally used for ranges of about one-hundred yards. It is the most difficult of all firing positions as the support for the weapon comes primarily from the right arm and right shoulder. There is no bone support as in the other positions. To assume this position, stand facing your target, make a right face and spread your feet a comfortable distance apart. Move your right foot slightly forward so that the body will be approximately 85° with your line of aim. The sling is not used in the standing position but will be left on the weapon in the parade position (fig. 4-25).

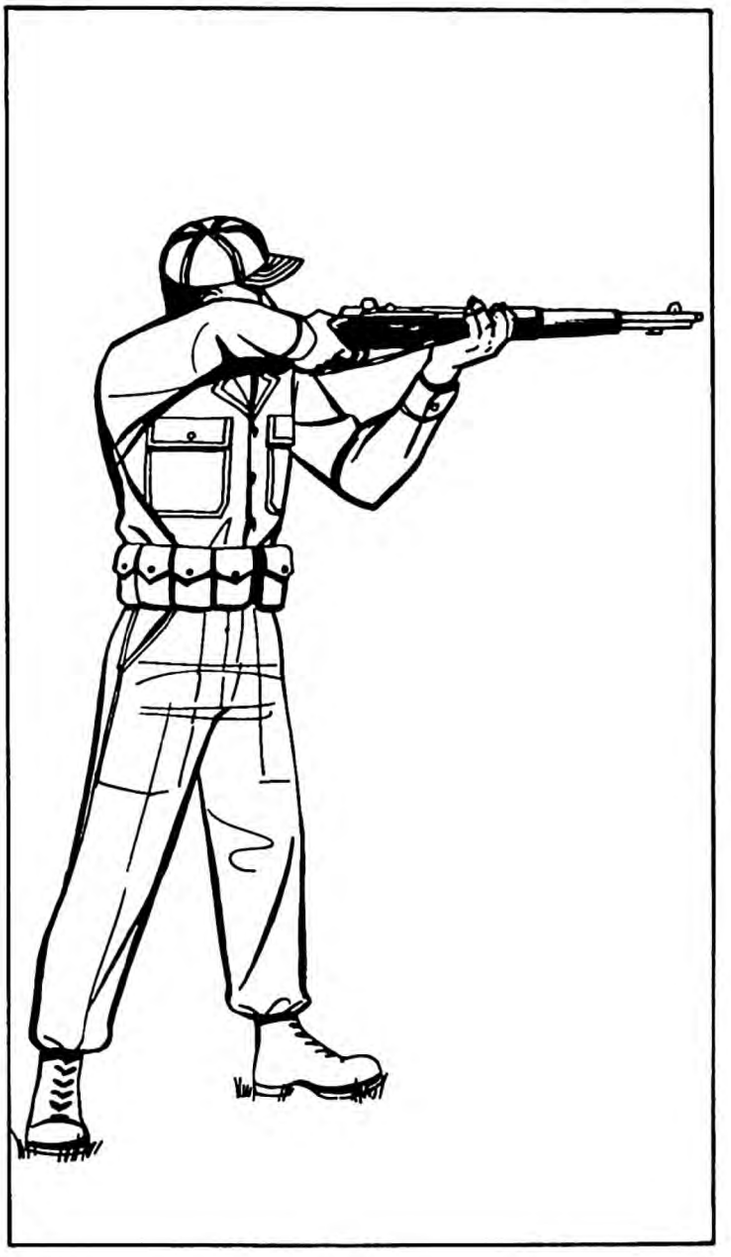

Figure 4-25

Place the left hand just forward of the balance and with the right hand, raise the rifle butt upward until the sights are level with your eyes. Do not

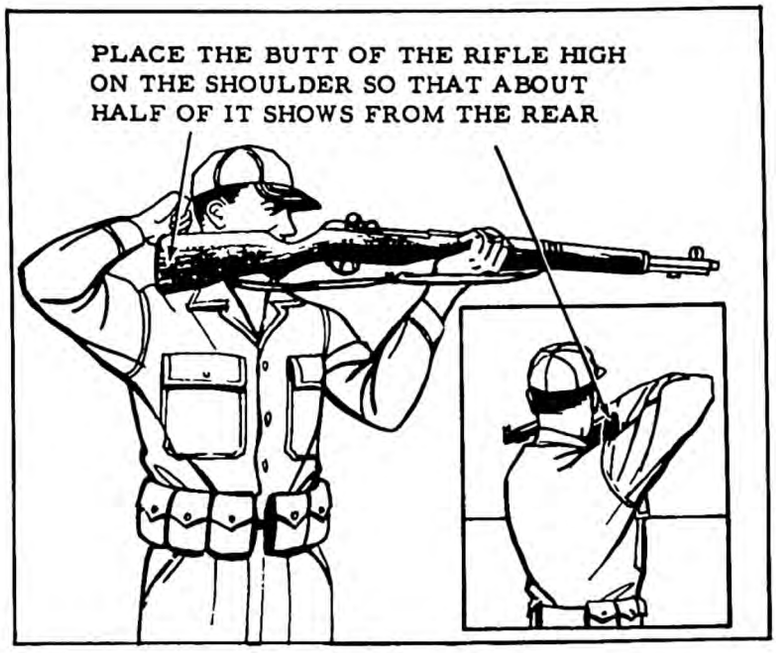

Figure 4-26. Taking the standing position.

bring your face downward to meet the stock (fig. 4-26). Raise the right arm high then bend the arm at the elbow until the hand can grasp the stock. The right elbow should be at least shoulder high or higher. Make certain that the hips are level and the weight of the body is evenly distributed on both feet (fig. 4-27).

These are the features of the standing position (figs 4-26 and 4-27):

a. The body is faced to the right, about 85° with the line of aim.

b. The feet are spread 10 to 14 inches apart (fig. 4-27).

c. The weight of the body rests equally on both feet (fig. 4-27).

d. The left hand may be anywhere between the balance and the stock ferrule swivel, with the rifle in the "V" formed by the fingers and resting on the heel of the hand (fig. 4-27).

e. The left elbow is under, or nearly under, the rifle (fig. 4-27).

f. The butt of the rifle is high on the right shoulder (fig. 4-26).

g. The right elbow is 45° above the level of the shoulder. The right arm and hand do all the holding -- the left arm only steadies the rifle (fig. 4-27).

h. The spot weld of the cheek and the right thumb is used when possible; otherwise, the cheek is pressed firmly against the stock (fig. 4-27).

i. The trigger finger is on the trigger and arched so that it does not bear against the stock (fig. 4-27).

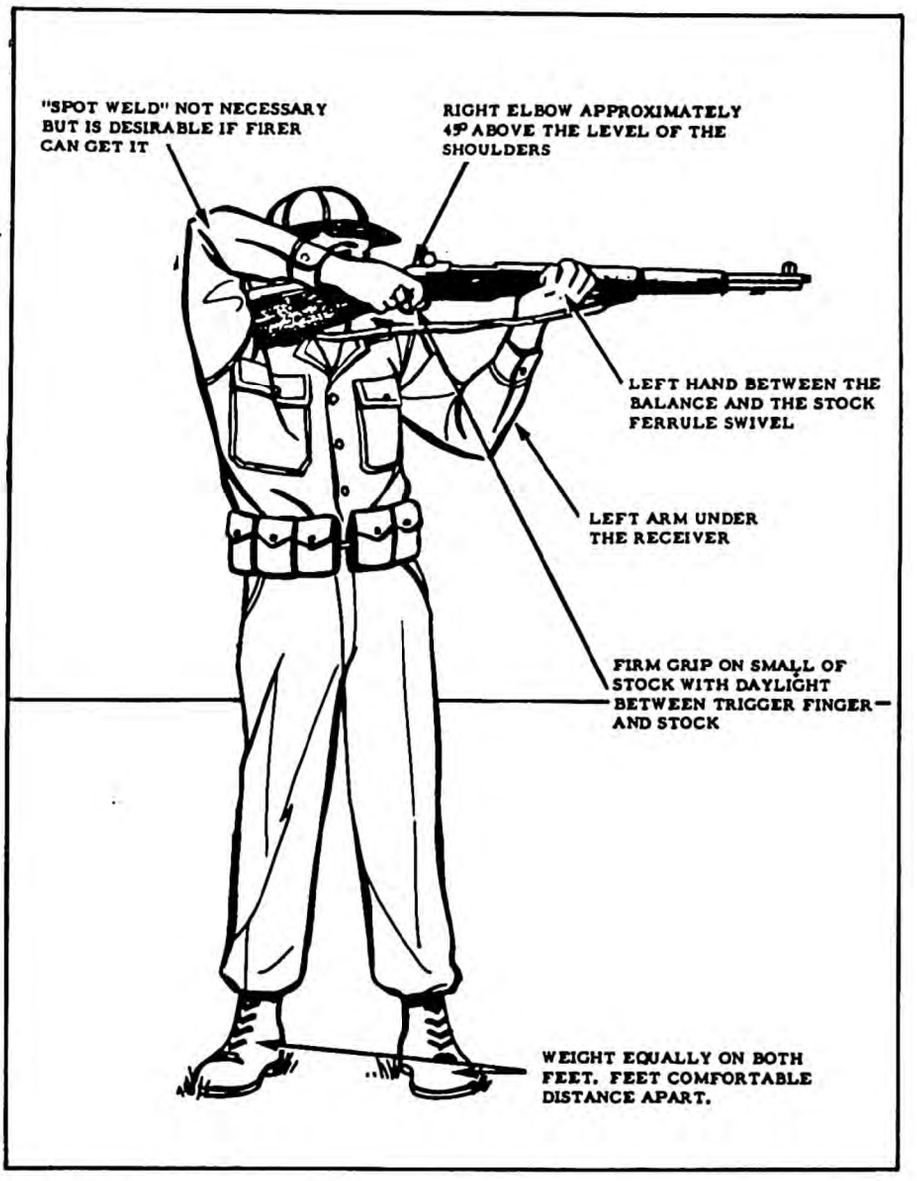

Figure 4-27. The standing position.

j. The firer relaxes the weight of his trunk straight down and evenly distributed on both hips.

The errors most frequently found in the standing position and the method of correcting them are:

a. Feet spread too far apart. The firer should place his feet as if he were going to stand still for about an hour without moving them.

b. Weight not evenly placed on both hips. The firer should relax his weight straight down.

c. Neck bent sideways or forward to get the cheek against the stock. Hold the head erect and bring the rifle sights up to the eyes.

TRIGGER SQUEEZE

The last physical action that takes place before the weapon fires is the squeezing of the trigger. It is the third element of premarksmanship, yet it is the most important single factor in marksmanship. Your position and aim may be perfect, but, unless the trigger is squeezed correctly, your shot will not go where you aimed. The two most common errors found in trigger squeeze are the jerk of the trigger and flinching. Where a jerk may disturb the sights only slightly, it can still spoil an otherwise perfect shot. Flinching is a body movement, made in anticipation of the recoil of the rifle. This movement comes before the bullet leaves the rifle and most often when the last squeeze has been made on the trigger, thus causing a more erratic shot than a jerk. The shooter is unable to call his shots closely when he jerks the trigger and is unable to call any shots when he flinches. The trigger must be squeezed with a steady movement of the trigger finger straight to the rear. If the firing of the shot surprises you, the shot will be good as you did not know when to flinch in anticipation of recoil.

To begin the trigger squeeze after you have taken your position, take a breath of air, let part of it out and lock your throat. Align the sights on the bull's-eye, take up the slack and part of the squeeze with a firm initial pressure. Continue the squeeze straight to the rear until the rifle fires. Follow through with your shot, that is, allow the rifle to settle back on target from recoil, continuing to hold your breath, aim and squeeze of the trigger. A good word to keep in mind to remember the sequence of squeezing off each round is "BRASS."

B - Breathe

R - Relax

A - Aim

S - Slack

S - Squeeze

A method of practicing trigger squeeze is illustrated in figures 4-28 and 4-29.

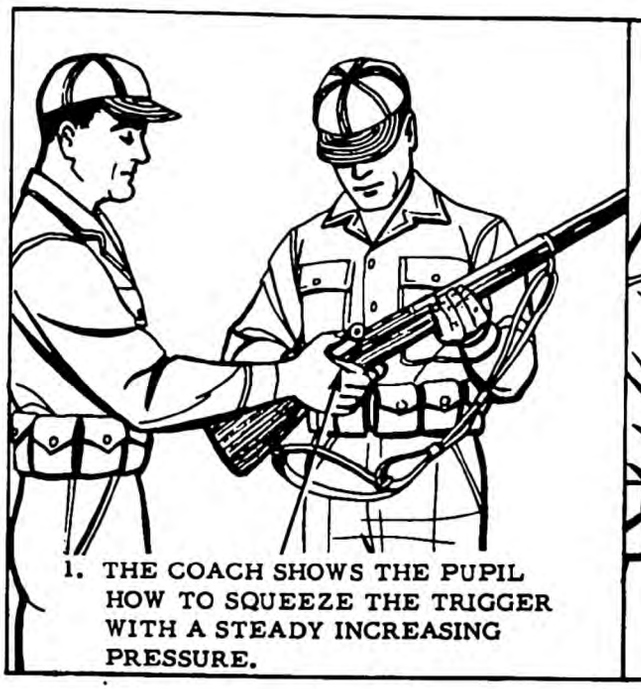

Figure 4-28. Trigger squeeze.

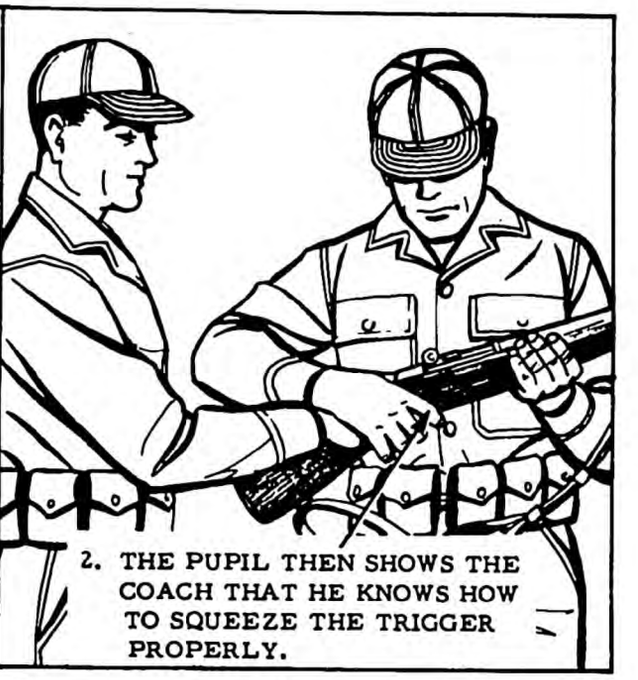

Figure 4-29. Trigger squeeze (continued).

RAPID FIRE

In mechanical training of the rifle, you learned that your rifle, has a high firepower capability. In order for the shooter to take advantage of this firepower, he must be trained in assuming positions rapidly, reloading and developing a cadence for firing a series of aimed shots at regular short intervals. This is known as rapid fire. In rapid fire, the elements previously discussed in this guide are utilized together in a high degree of coordination and there is a minimum loss of time between shots. The rifle must be aimed, a good steady position must be maintained and the trigger must be squeezed properly. The positions from which rapid fire is conducted are: sitting, kneeling, and prone. In the courses of fire where you will encounter rapid fire stages, the stage is begun with the shooter assuming the position from which he will fire, making certain that he is aiming at his target naturally (natural point of aim). Once the shooter is satisfied with his position, he marks the position in relationship to the ground. He then rises, keeping his feet in place. The Chief Range Officer will then give the command to "load," at which time the shooter loads a partial clip or magazine into the weapon - the number of rounds to be loaded will also be specified by the Chief Range Officer. (All commands for Loading,

Assuming Positions, and Firing are found in your study guide on Range Operations, AIR75330-II-6.). After the command "load" has been given and all shooters have indicated they are ready, the signal for the shooter to assume position and commence firing will be the appearance of the targets from the pits, if pit operation is employed, or on oral command from the Chief Range Officer.

In your rapid fire training, the following exercises will be taught with the time limitations as indicated. Time limits indicated also include the time necessary to assume positions.

POSITION	1 - SHOT DRILL	3 - SHOT DRILL	10 - SHOT DRILL
Sitting	9 1/2 Seconds	22 1/2 Seconds	50 Seconds
Kneeling	9 1/2 Seconds	22 1/2 Seconds	50 Seconds
Prone	10 1/2 Seconds	25 1/2 Seconds	60 Seconds

In 1-shot drill, with the shooter in the standing position, a dummy round may be inserted into the weapon or the bolt of the weapon is closed, leaving the hammer in the cocked position. On the command "ready on the right," the shooter will check his left hand (extended all the way forward to the stock ferrule swivel). The next command will be "ready on the left" and the shooter will check his rear sights, ascertaining that he has no obstructions on the sights and proper elevation and windage have been applied. On the command "ready on the firing line," the shooter will partially open the bolt, check the chamber to make certain a round has been chambered and then close the bolt, striking the handle of the operating rod with the palm of the right hand to lock the bolt in place. The shooter will then take the safety OFF and stand facing his target. The Chief Range Officer will then command "targets, UP," at which time the shooter will immediately drop down into position and squeezes off the round within the time limit indicated above. DO NOT sacrifice accuracy for speed. Perform all exercises deliberately and without hurrying.

The 3- and 10-shot drills are performed in the same manner and with the same commands as 1-shot drill except for the number of rounds (dummy) loaded into the weapon and the use of the coach to eject each round as the trigger is squeezed by the shooter. For 3-shot drill, the shooter will load a partial clip of two rounds while in the standing position. The shooter will also have a full 8-round clip in the pocket of his cartridge belt (2nd pocket for sitting and kneeling, 3rd pocket for prone). Upon command, he will asume the firing position, squeeze off both rounds -- the coach ejecting the rounds. The position of the coach for rapid fire drills is shown in figures 4-30 and 4-31.

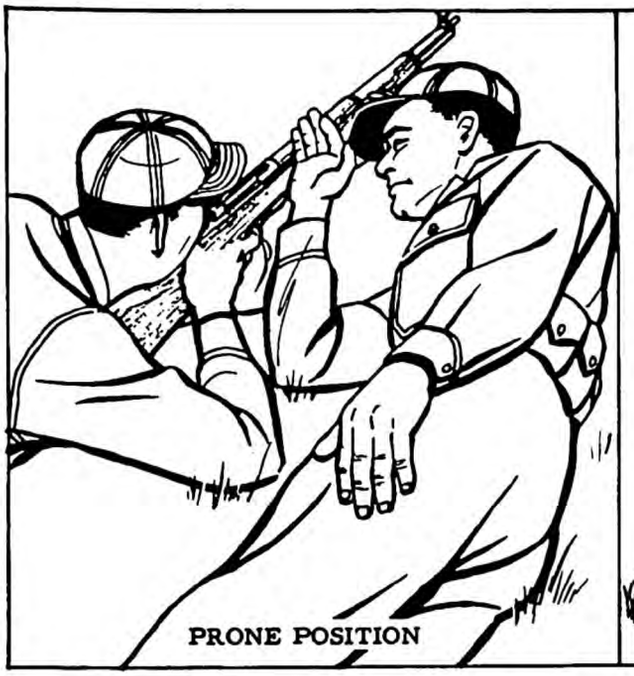

Figure 4-30. Practicing sustained fire.

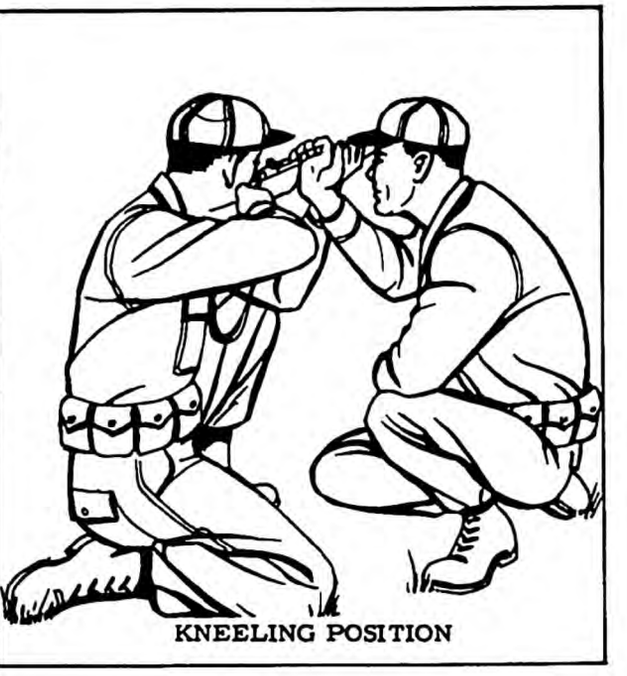

Figure 4-31. Practicing sustained fire (continued).

When the second round has been squeezed off, the shooter will immediately reload with the full clip, return to position, aim and squeezes off the first round from the full clip. Method of reloading from the prone and sitting position is illustrated in figures 4-32 and 4-33. The coach then places the safety ON, opens the bolt and the coach will unload the remaining rounds. DO NOT rise from position until commanded to do so by the Chief Range Officer.

The 10-shot drill is the same as 3-shot drill, the coach ejecting each round on each squeeze of the trigger by the shooter. For all drills, the coach should strive to strike the handle of the operating rod straight to the rear to simulate normal recoil of the weapon. The 1- , 3-, and 10-shot drills will be practiced in the sitting, kneeling, and prone positions. All rapid fire exercises begin with the shooter loading the initial rounds while in the standing position. He must reload all other rounds while in his firing position (figs. 4-32 and 4-33).

NATURAL POINT OF AIM

Although not a separate element of premarksmanship, mention must be made of this most important principle of marksmanship training.

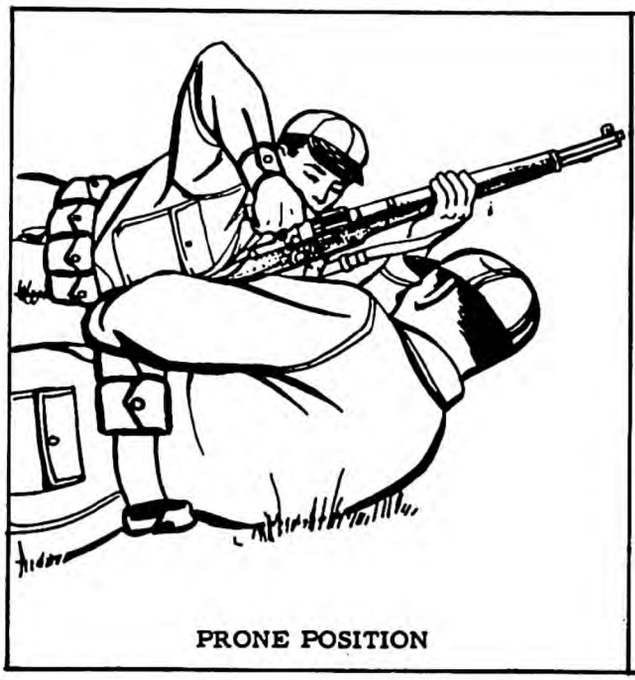

Figure 4-32. Reloading.



Figure 4-33. Reloading (continued).

Natural point of aim may be defined as that position which permits the shooter to point or aim directly at the center of his target. If the shooter's point of aim is either to the right or left, the entire position must be shifted to gain natural point of aim. Should the shooter fail to establish natural point of aim, he would be forced to muscle his weapon each time the weapon is fired. The shooter should attempt to establish his natural point of aim during his preparation period and should regain this same position before he commences to fire.

SUMMARY QUESTIONS

1. What is Natural Point of Aim?
2. What is the most important single factor in marksmanship?
3. What are the two most common errors in practicing trigger squeeze?
4. What is the difference between sight alignment and sight picture?
5. What are the five essential elements of preparatory marksmanship?
6. What is the size of the bull's-eye used in triangulation exercises conducted at fifty feet?

UNIT 3

RANGE OPERATIONS

OBJECTIVE

To familiarize the student with the operation of various types of rifle ranges, including personnel requirements and the duties of those personnel.

INTRODUCTION

To have a range operate safely and efficiently, certain personnel are needed and these personnel must be trained by you. Therefore, it is incumbent upon you to know their duties. The personnel and some of their more important duties are as follows.

PERSONNEL AND DUTIES FOR OPERATION OF CALIBER .22 RANGES

EXECUTIVE OFFICER

The Executive Officer is directly responsible for the efficient conduct of the entire match and for the safety and discipline of all operating personnel. Makes decisions affecting operation of the match.

OFFICIAL REFEREE

The Official Referee is assigned by the National Rifle Association. He makes decisions and advises Executive Officer. Has final authority on challenges and protests, at a match.

CHIEF RANGE OFFICER

The Chief Range Officer has full charge of the range and conduct of the match. Responsible for the safety of personnel and trains personnel for duty on the range and gives range commands. The proper range commands are: "Is the line ready?" "The line is ready." "Ready on the right?" "Ready on the left?" "Load." "Ready on the firing line." "Commence firing." After time limits, (one minute per round in prone position, one and a half per round in all other positions - NOTE: In accordance with AFR 50-8, time limits in each position are one minute per round), he will command "Cease firing." "Bolts open." Commands for carbine firing are the same as in 1000" range.

RANGE OFFICERS

The Range Officer (Block Officers) are assistants to the Chief Range Officer. They are responsible for discipline and safety in his block of targets. (Ideal situation is to have one Range Officer to each 10 targets.) Competitors may be assigned these duties. Range Officers signal Chief Range Officer if their assigned area is ready or not. The signals are palms out, wrists crossed overhead to indicate not ready; palm out in front of face to indicate ready.

STATISTICAL OFFICER

The Statistical Officer is in charge of all registration, squadding and computation of scores.

TARGET DETAIL

The target detail should have enough men to repair and replace targets. Competitors may be required to change their own targets.

AMMUNITION HANDLERS

Ammunition handlers issue ammunition if ammunition is provided by USAF.

ROAD GUARDS

Road Guards are posted at both ends of any road leading into or out of the impact area. They are to keep personnel out of possible danger areas.

GENERAL INFORMATION

A red danger streamer, 5' 9 3/4" hoist by 18' fly must be flown from a prominent place during range firing. Firing should never be permitted until the red streamer has been displayed.

PERSONNEL AND DUTIES FOR OPERATION OF HIGH-POWER RANGE.

A "high-power" range is one on which center fire rifles are fired, to include the US Carbine, and pits are employed.

CHIEF RANGE OFFICER

The Chief Range Officer has the same duties as with smallbore firing with the additional responsibility of supervising the Pit Officer. The Chief Range Officer will use the following commands in high power rifle firing: "Lock, ___ number of rounds, load." (Example - "Lock, two rounds, load.") "Is the line ready?" "The line is ready." "Ready on the right?" "Ready on the left?" "Ready on the firing line." "Commence firing." (The command, "Commence firing" is given verbally on slow fire. The appearance of the targets from the pits is the command to commence firing on sustained fire.) "Cease fire." "Unload." "Are there any alibis?" "Are there any discrepancies in the pits?" (Sustained fire.)

EXECUTIVE OFFICER, OFFICIAL REFEREE AND RANGE OFFICERS

Same duties as in smallbore firing.

SCORERS

The scorers record the value of the hit as signaled from the pits and announces the value in an audible tone to the shooter in the following manner: "Airman Blank's first shot for record on target number _____, a five (5)."

PHONE ORDERLIES

The phone orderlies relay messages to the pits. Ideal situation is to have one operator for each ten shooters with a like amount in the pits. Phone orderlies also relay all requests to pits. Some of the more common requests, proper wordage and meaning are:

Speed Service: Means operation of targets are slow, speed up handling.

Mark Target #___: Means to lower target, spot and disk in normal manner.

Disk Target #___: Means to disk value of last shot without withdrawing.

There is a challenge on target #___. Remark: Pit Officer must personnally examine target and signal value. This is done when shooter disagrees with marking.

In addition to the above, the phone orderly nearest the Chief Range Officer transmits range commands from Chief Range Officer to pits during sustained fire. This is to avoid confusion between the pits and the firing line. He also operates the phone for the ambulance.

PIT OFFICER

The Pit Officer has direct charge of pits, safety and discipline of pit personnel; examines disputed targets and signals value of challenged targets. During slow fire, signals misses. He will arrive at the pits in advance of the detail and see that all equipment needed is in working order and ready to be used. He will know the number of men firing and the number of men he will have to operate the pits. He will make certain that a red flag, 24" hoist by 36" fly is displayed above the pits until a clearance has been given by the Chief Range Officer. He will allow no one to leave the pits until a clearance has been given by the Chief Range Officer. The Pit Officer gives the commands to handle targets when all targets are to be operated at once such as in sustained fire. In sustained fire, the target handling commands are:

"The flag is up."	(Have a target operator raise the flag between two targets nearest Pit Officer.)
"The flag is waving."	(Have target handler wave flag for approximatelv five seconds.)
"The flag is down."	(Have handler lower flag.)
"Stand by your targets."	(Target handlers prepare to raise targets at same time.)
"Targets, UP!"	(Handlers raise targets. There should be a a five-second pause between the commands "The flag is down" and "Targets, UP!"

The Pit Officer begins his timing when the majority of the targets have reached the top of the frame. Several seconds before expiration of time limits targets are to remain exposed, the Pit Officer commands:

"Stand by targets."	(Target handlers prepare to lower targets simultaneously.)
"Targets down."	(Handlers lower targets so that the majority of the targets are lowered at the end of the time limits. The time limits will vary, depending upon the course fired and the weapon used. The Pit Officer begins giving commands when the command "Ready on the firing line" is given by the Chief Range Officer to the shooters. The commands from the firing line to the pits for a sustained fire stage are relayed to the Pit Officer by the Phone Orderly nearest the Pit Officer. The Pit Officer will check all targets having excessive or fewer than the required number of hits.)

PIT BLOCK OFFICERS

The pit block officers have the same duties as the firing line block officers in that they assist the Pit Officer in controlling pits and target handlers. (Ideal situation is to have one pit block officer to each ten targets).

TARGET HANDLERS

Ideal situation to have two (2) target handlers per target. The target handlers operate the targets, complying with requests received from the line through the pit block officers. During slow fire, mark targets by lowering it and placing a spotter in the bullet hole. NOTE: A "spotter" is a cardboard disk, white on one side and black on the other, with a wooden peg through its center. The spotter is placed in the bullet hole, white side towards the firer when the hit is in black area (bull's-eye) and reversed in the white area. These spotters vary in size. For short ranges, (100 through 300 yards) the spotters are three (3) inches in diameter. Five inch spotters for 500 and 600 yards. Once the spotter has been placed in the bullet hole, the target is raised and the value disked. The spotter is left in place on the target until another round has been fired, then it is changed to the new bullet hole. A "disk" is a wooden pole approximetely eight (8) feet in length with a colored metal disk at each end. One side of the disk is red and the reverse white. On the opposite end, one side is black and the reverse side white with a black cross. The disks also vary in size, the size to be used depended upon the range fired. A twelve inch disk (diameter) is used in ranges from one through 300 yards; a twenty (20) inch disk for ranges of 500 and 600 yards. Marking procedures for signaling hits are:

"V" - The white disk is raised to the right side of the target, moved across the target and lowered on the left side.

"Five" - The white disk is placed directly in front of the bull's-eye. It is raised and lowered through the center of the target.

"Four" - The red disk is raised to the right side of the target.

"Three" - The red disk is raised to the left side of the target.

"Two" - If twos are counted, the black disk is raised until just below the bull's-eye.

"Miss" - A miss is signaled by waving a red flag across the target, once for each miss.

Some of the safety precautions to be taken by the pit personnel and target handlers are:

1. Do not expose any part of the body above the parapet.

2. Be careful not to injure yourself when operating targets.

3. When handling the target disk, take care not to strike other target handlers. When you place the disk down, make certain that it will not fall, possibly causing injury to you or other target handlers.

4. Because of possible richochets, do not move behind the line of targets.

5. At any time there are men in the pits, there should be a red flag displayed at each end of the line of targets.

6. At any time communications is broken between the firing line and the pits, firing will cease. Targets will be lowered to cause cease firing. (This does not remove the responsibility from the Chief Range Officer to command cease firing).

ROAD GUARDS

Same as for smallbore firing.

ADDITIONAL INFORMATION FOR HIGH-POWER RANGES

A "ready line" will be established ten (10) yards behind the firing line. Establish an "assembly line" behind the "ready line". Shooters will remain in appropriate areas until ordered forward. Medical personnel will be present or available on call. Practice (dry fire) will not be allowed behind the firing line.

PERSONNEL AND DUTIES FOR OPERATION OF 1000" RANGE (CARBINE)

CHIEF RANGE OFFICER

The Chief Range Officer has the same duties as with smallbore and high-power ranges. There is not pit operation. Range commands used in 1000" firing are; "Lock, one magazine of _____ rounds, Load." (In slow fire, rounds are loaded singly.) "Is the line ready?" "The line is ready."

"Ready on the right?" "Ready on the left?" "Ready on the firing line?" "Commence firing." After time limits have expired (one minute per round slow fire, 45 seconds for all sustained fire stages), the command "Cease fire" is given, followed by "Unload."

RANGE OFFICERS

The Range Officers have the usual duties as in smallbore and high power matches, in addition, they also clear malfunctions and ascertain if alibis are allowed.

GENERAL INFORMATION

Phones are not required for 1000" range firing. Pit operation is not employed in 1000" range firing. A danger streamer must be flown. Road guards must be posted if required.

SUMMARY QUESTIONS

1. What signal does the Block Officer give when his section of shooters is not ready for firing?

2. Who is responsible for the safety and training of personnel for duty on the range?

3. What disk is used to indicate the value of a "five" when range firing is being conducted at 200 yards?

4. Who supervises the Pit Officer?

5. What official in a smallbore or high-power rifle match has final authority on challenges and protests?

6. How is the command for loading given in high-power rifle firing?

7. In a high-power rifle match, what official examines disputed targets and signals value of challenged targets?

8. During a slow fire stage of a high-power match, you are performing duty as a Target Handler. The shooter on your target has scored a miss. What signal is given for this miss? Who signals the miss?

9. For a sustained fire stage of a high-power rifle match, when does timing of targets commence?

10. Where pit operation is employed, what official has the responsibility of checking targets having excessive or fewer than the required number of hits?

BIBLIOGRAPHY AND REFERENCES

NRA Smallbore Rule Book, 1 January 1963.

NRA High Power Rule Book, 1 January 1963.

FM 23-5, US Rifle, Cal. .30, M1, September 1958.

AFM 50-4, US Carbine, Cal. .30, M1, M1A1, M2 & M3, January 1952.

AFR 50-8, Small Arms Marksmanship Training, 8 November 1962.

UNIT 4

COACHING TECHNIQUES

OBJECTIVE

To understand the basic duties, responsibilities, and techniques of individual and team coaching.

BASIC DUTIES

The coach's duties are observing, detecting, and correcting the individual's errors, improving the methods, and calling the attention to forgotten or overlooked principles of marksmanship. He checks the shooter's equipment, selects and pairs the team shooters for team firing, team training, and team spirit.

DETECTING AND CORRECTING SHOOTING ERRORS

The coach must not only be able to detect errors and determine their cause and cure, but he must also be able to calm the shooter and inspire him to practice the fundamentals that lead to shooting perfection. The first problem of the coach is to detect the error causing the difficulty. The shooter may be firing into the butts or splattering the target. The coach must immediately tell the shooter whether he is flinching, jerking, or bucking, and whether the shooter is aiming, holding, or squeezing the trigger badly. Sometimes one or more, or all of these factors are involved. The coach determines where the blame lies by watching the firer--his head, face, shoulder, trigger finger, left hand and arm, plus the rifle. The coach should also analyze the hits on the shooter's target. There are many combination of errors that provide the same pattern of hits. Analyzing the target and observing the shooter will enable the coach to determine the source or sources of trouble.

POOR POSITION AND HOLDING

Correct position and holding are the foundation for good shooting. Without a good position it is difficult, if not impossible, for the shooter to hold the rifle steady enough to fire a good group. A position which affects the shot group will be clearly indicated by a wavering rifle. The best method of correcting a faulty position is by working and practicing the position until corrected.

ERRORS IN AIMING

If errors in aiming are indicated, the coach should check and make sure the shooter is using a correct sight picture. Remember sight alignment is the most important part of sight picture. The best method the coach can use in detecting and correcting improper aiming and holding is the M2 sighting and aiming device (fig. 5-1).

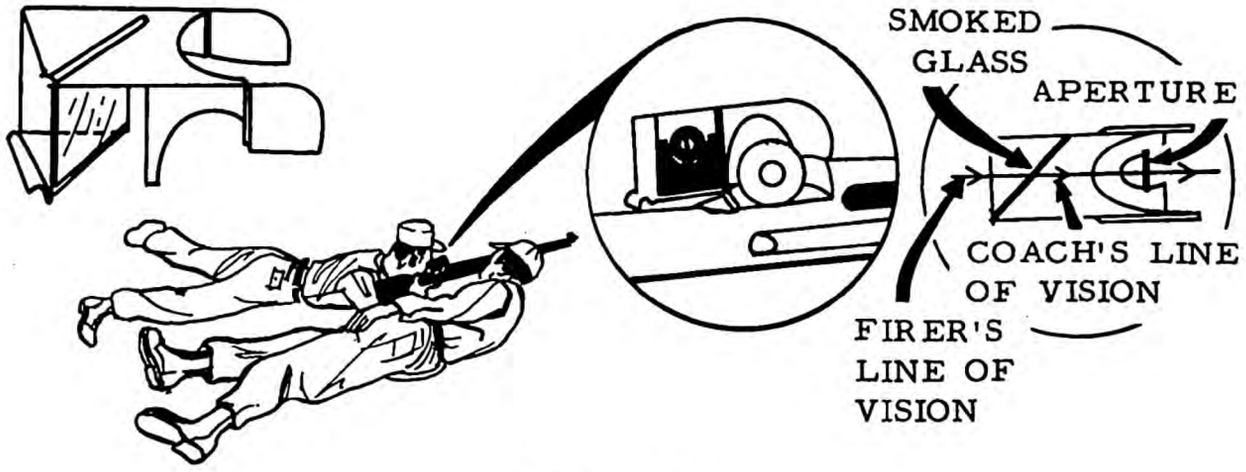

Figure 5-1

The sighting and aiming device which fits over the rear sight is a valuable aid to the coach in detecting errors in trigger squeeze as well as aiming and holding. A piece of smoked glass inside the device enables the coach to see the same sight picture the shooter sees by a reflection on the glass. Watching the reflection on the glass, the coach can determine if the shooter is obtaining the correct sight picture and squeezing the trigger properly. The coach will see the shooter's sight picture in reverse; this will be indicated by the shooter calling a shot to the left and the coach will see it to the right. The coach must practice to use the device correctly. The proper techniques are:

1. Look straight into the device, adjust your position as necessary.

2. Steady your position and hold your breath while checking the shooter's sight picture.

3. Watch for any sudden changes in the sight picture the instant before the rifle fires. A sudden change indicates jerking the trigger or flinching.

COACH'S POSITION

The coach must be able to observe the shooter as well as the target. You can do this by assuming a position similar to the shooter, with your head within a two-foot radius of the shooter's face. PRONE--the coach lies on the shooter's right (right-handed shooter) with his body in the same direction as the shooter. Support the head with the right hand (fig. 5-2). SITTING--the coach sits on the shooter's right and faces him (fig. 5-3). KNEELING--the coach kneels on the shooter's right and faces him (fig. 5-4). STANDING-- the coach stands on the shooter's right and faces him (fig. 5-5). During rapid fire, it will sometimes be necessary for the coach to strike the operating rod handle to the rear during dry-fire exercises.

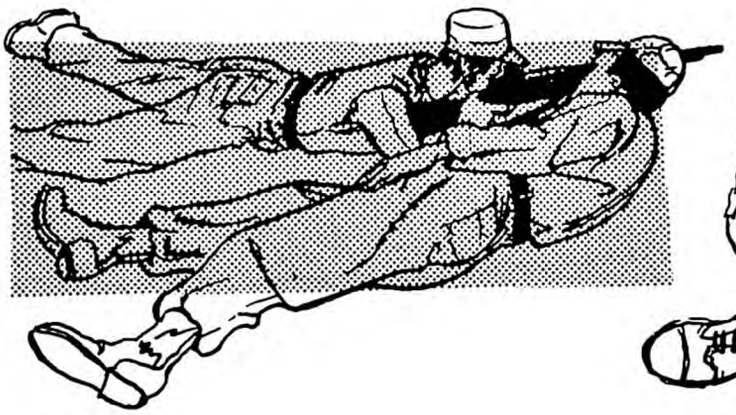

Figure 5-2



Figure 5-3

CALLING SHOTS

The shooter after squeezing off a shot should continue to aim and continue to squeeze the trigger for a second or two. This is called "follow through." When a shooter follows through, he does not come out of position before the round clears the muzzle. By holding his aim and following through, he can tell with certainty what sight picture he has at the instant the bullet leaves the muzzle and knows where it will strike the target. In other words he can call the shot, which illustrates how shots are called. A shooter who can call his shots consistently will develop into a good shooter.



Figure 5-4

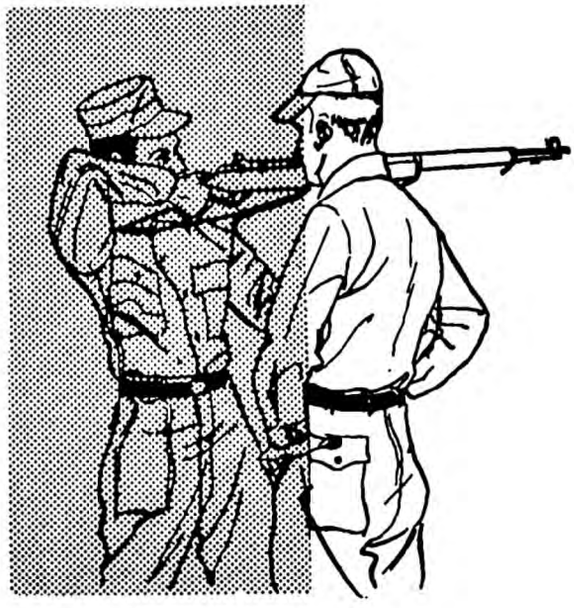

Figure 5-5

TRIGGER SQUEEZE

Improper trigger squeeze is usually caused by the shooter flinching at some instant between the time he takes up the slack and the time the bullet leaves the muzzle or is caused by the firer jerking the trigger.

FLINCHING

Involuntary reaction of a muscle (or muscles) in anticipation of the muzzle blast of the weapon. A common reaction in beginners and some seasoned shooters who know when the rifle is about to fire.

JERKING

Uncontrolled, spasmodic reaction of the trigger finger, often caused by the shooter's effort to shoot well. That is, the instant he aligns his sights and sees a good sight picture, he jerks the trigger, hoping the bullet will clear the muzzle before he interrupts his sight picture. No matter how quickly he jerks the trigger, the violent movement interrupts his sight picture.

BUCKING

The sudden movement of the right shoulder (right-handed shooter) in anticipation of recoil. It is the shooter's way of fighting recoil. It will spoil his best efforts to squeeze the trigger properly.

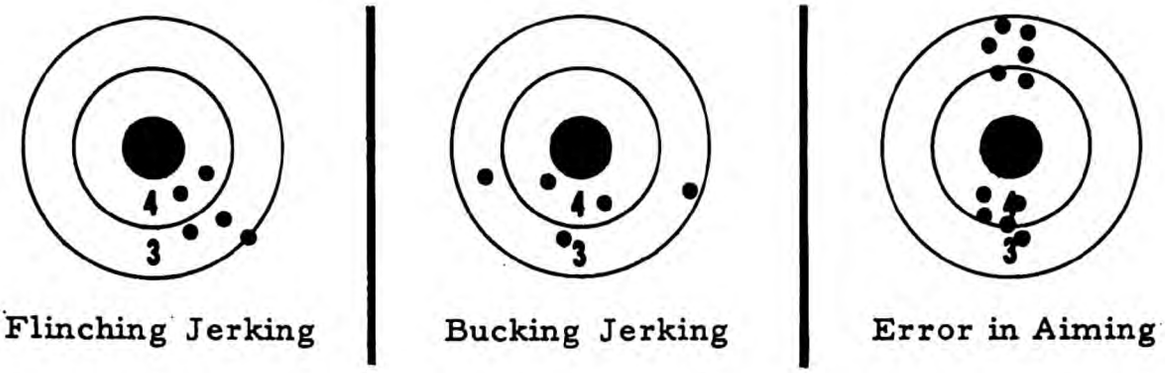

Flinching Jerking | Bucking Jerking | Error in Aiming

Figure 5-6

DETECTING AND CORRECTING TRIGGER SQUEEZE

The coach can use the following procedures in checking and giving instruction in trigger squeeze. When by observation of the shooter or his target the coach suspects or detects with certainty a faulty trigger squeeze, he should correct the shooter by putting him through the following sequence.

1. Have the shooter relax.

2. Explain the cause of his faulty trigger squeeze. (Flinching, Jerking, Bucking)

3. Check for correct position, earplugs, etc.

4. Check the shooter by the ball-and-dummy method. The coach has the shooter turn his head while the coach loads a ball (live round) or dummy round into the rifle. Then the coach talks the shooter through the sequence of firing. (BRASS)

Breath - Take a normal breath, let part of it out, lock remainder in the throat.

Relax - Relax the muscles completely, letting the sling help you do this.

Aim - Complete the aim, focusing the eye on the top of the front sight blade.

Slack - Take up the trigger squeeze.

Squeeze - Squeeze the trigger straight to the rear until the hammer falls.

Remind the shooter to concentrate on sight alinement. The shooter should squeeze off the shot within three to five seconds. If he doesn't, have the shooter relax and start again. Have the shooter call each shot

and the coach will tell the shooter what he did wrong. While using the ball-and-dummy method, the coach should watch the shooter for any evidence of muscular contraction and watch his expression after the hammer falls on a dummy round. If the shooter reacts incorrectly, the coach can detect it by the surprised or guilty look on his face.

BLANK TARGET

This exercise helps the shooter who jerks the trigger once he attains perfect sight picture. Have the shooter fire a shot group on a blank target without a bull's-eye as an aiming point; this will prove importance of sight alinement to the shooter and show that he can squeeze the trigger properly.

METAL DISK

For this exercise, place a dime on the shooter's rifle barrel just behind the front sight. Have the shooter try to squeeze the trigger without dislodging the dime. Try to prove or convince the shooter that there is a definite feel to the rifle when the firing comes as a surprise. If the shooter is not convinced that faulty trigger squeeze is causing his bad shot groups, have him assume a good position, but with his right hand at the small of the stock. Squeeze the trigger for him. This invariably results in a better shot group. In most cases, it is best to disregard small errors that do not greatly affect shooting, so the shooter can concentrate on sight picture and trigger squeeze. That is, a good coach does not clutter up a shooter's mind with corrections of minor errors in position, or make him spend a lot of time correcting a failure to squeeze the trigger straight to the rear when a bad flinch or jerk is causing him to shoot into the butts. If the fault does not lie with any of these, check the accuracy of the rifle. Fire it yourself and have one or more other good marksmen fire it. After giving the shooter corrective instruction, permit him to resume firing. Observe him from time to time for any recurrence of trouble.

TEAM COACHING

A team is a group of shooters directed by a coach. Their primary mission is scoring all the points that is possible. These are a few of the coach's duties, responsibilities and techniques.

TEAM SELECTION

As the coach, you will use fired scores as the determing factor in the selection of a team. Also the coach considers previous match scores, physical, mental, morale conditions, attitude and efforts, along with time available for individual training. A shooter who can devote a lot of time to training is more advantageous to a coach than a shooter who has very

little time available, even though the shooter with less time may be the best shot. Also some shooters do poorly as individuals, yet do very well in team firing when steadied by a coach.

TEAM TRAINING

The hardest part of coaching is being able to communicate information to your shooters. The coach must have confidence in his shooters as well as himself. The coach must talk as little as possible while on the firing line. When he does, he gives clear positive commands, such as: "hold closer," "more white," "favor right," "favor left," etc. It is also the coach's responsibility in selecting training subjects, material and scheduling team training. Example, practicing the prone position continuously is not necessary in order to shoot good scores. Why not devote more of this time to standing or kneeling, points gained in these positions will win you matches. Know your men and treat them with respect and courtesy.

MATCH TECHNIQUES

Hold the team briefing 20 to 30 minutes before each match. At this time, check your team's equipment, especially the sighting equipment. Give the shooters their firing orders, relay and target number. Select and go over with the team the commands you will use in the match. Review team rules and match regulations with your team. Assign a team member to check and verify scoring by the scorer. Check and set up coaching equipment on the ready line (team scope, stop watch, stool, etc.). Call the first relay to the firing line.

COACH'S DUTIES FOR SLOW FIRE

Have the shooter report to the scorer. Give the scorer the order of firing, name of shooter, rifle number. At this time the scorer will usually issue the shooter his ammunition. Be sure the shooter inspects the ammunition. Remind the shooter to keep the ammunition out of the sun. Position the team on the target assigned. The shooters are to the right and left of the stake. Position the coaching equipment on the firing line. In pair firing, the coach sets the scope between the shooters, as close as possible without interfering with the shooter. Place the stool behind the scope and hang the stop watch around the scope. The coach usually puts a very strong shooter to the right of the stake as the lead shooter. Ask the shooter for his correct sight setting for the range being fired. Then have the shooter check his rifle to be sure it is set for the proper range. Make sure the shooter is in a perfect position, then give him his initial wind setting. As the targets appear, or commence fire is given, the shooter should call out his target number as he assumes the position. At the same time the coach starts his watch for timing the

string of fire. By having the shooter call out his target number, this assures the coach that the shooter is firing on the right target. While on the firing line, the coach must remember he cannot touch any of the shooter's equipment. He can only talk and give instructions to the shooter.

DURING FIRING

The firer on the right fires first. Observe the operation of the target. The coach must ask for more time if the operation is slow or improper. The holding and squeezing of the first shot, and calling the shot exactly is very important. This aids the coach in his future decisions. The coach must keep the shooter calm and relaxed, during any challenges, target disputes, or cross fires. The shooter calls the position of his first shot on the target. The decision to move the shot is the coach's. Presuming the shot goes where the shooter calls it, the coach then checks the wind conditions and gives the second shooter instructions and has him fire. Honesty of the shooter in calling his shots and making sight corrections as directed by the coach is very important. The coach is dependent on the shooter from shot to shot. If the shooter lets a shot get away, it's his duty to inform the coach. Without a true call the coach is lost. The coach occasionally must order sight changes when apparently no one else thinks one is needed. In bad light of weather when a mirage cannot be distinguished, often the call and the shooter are the coach's only guides to follow in making changes. Mirage depends on many things such as, temperature, light, ground temperature, and humidity. Visible mirage is one of the coach's guides for sight changes. Elevated flags at the butts are also very helpful in determining sight changes. This is due to the bullet path, for most of the flight is well above where wind is not apparent, yet has no effect on the bullet. The coach must remember light changes and eye fatigue give more elevation variation than small mechanical errors which may vary from day to day or ammunition lots. The shooter should rest his eyes between shots to keep them from tiring. A cloud darkening the target suddenly may require one shooter to make more of a sight change than another shooter. In dull light, the shooter usually shoots higher. This can be determined by the shooter's score book, if it is maintained properly, with all the data filled out.

RAPID FIRE

Coaching rapid fire, the coach practices most of the principles as in slow fire. There are a few techniques, however, in rapid fire that are not in slow fire which the coach must use. Check the shooter for the following: sights blackened and set for correct rapid fire string, rifle cleaned and lubricated properly, sling adjustment, tightness of the sights and the gas cylinder lock screw, score books filled out properly, safety on and bolts open. Shooter to the firing line and set up to the right of the stake,

assume a good firing position. The coach at this time sets up his equipment directly behind and as close to the shooter without hindering the shooter as possible. The scope should be directly behind and above rifle, pointing parallel to the rifle bore. Remind the shooter that no part of his body can touch the ground in front of the firing line, or dig in or use holes in assuming a position. Check out a natural point of aim, dry fire when permitted. Reading the airwash of the bullet into the target is important to the coach. By placing your equipment properly as stated before, you will be able to read the bullet airwash with most spotting scopes in use today; you can see the bullet holes in the target. But seeing the bullet wash to the target and the bullet hole will aid you in giving instructions to the shooter much faster. If the equipment is set up wrong, you may get a false picture of the wash to the target, usually horizontal. There are two methods of thought for the controlling of the shooting of a rapid fire string. The first method is the shooter controls his shooting in rapid fire. The coach calls the shot and the shooter makes the necessary corrections from the call. This is accomplished by the correlating of the call with his mental call of the fired shot. This takes place in two ways, the coach calls the first and second shot or the first and third shot and then remains silent. The other way is for the coach to call every shot to the shooter as they are fired. The other method of firing a rapid fire string is the coach controlling the shooter. The shooter fires the first two shots and makes his call to the coach. The coach correlates the call with the visual position of the shots on the target and gives the shooter the necessary instructions for his next shots, during the action of reloading. Remember the calls are given immediately before the shooter recovers from recoil. This way distraction from concentration of the next shot is avoided. Calls are given in short, sharp syllables. The above methods have both good and bad principles. The coach should adapt the principles which are best suited for his shooters. In timing the shooter in a rapid fire string the coach starts his watch when the majority of the targets are up. Keep a close check on the shots fired and the time left and give the commands accordingly. Be sure the shooter takes his own scope to the line in both slow and rapid fire. He will need to check spotters and the placement of his group for his score book. This will keep him from tiring his eyes by looking down range all the time. Some people think it is only important for the coach to have a scope and let the shooter shoot. You will find that a shooter shooting blind will not be at his mental best. He can do better when he knows where the shot is going. A rifle team is made up of individual shooters with individual habits and temperaments. The coach must handle each shooter according to his traits. After each match as soon as convenient, hold a critique of the team, bringing out the weak and good points of the match while they are still fresh in everyone's minds. Use the coach's check list as a guide in conducting your critique of the shooters firing during the match.

COACH'S CHECK LIST

In slow fire the coach will observe that:

rifle is clear and no defective parts are present.

ammunition is clean.

sights are blackened and set correctly for elevation and windage.

shooter has a correct position and the sling is adjusted properly.

rifle is loaded on command only.

trigger squeeze is properly executed.

shooter's face and whether he jerks, flinches, or bucks the rifle.

the calling of the shot after he fires.

shooter keeps the score book properly.

shooter is breathing properly before each round.

shooter is aligning his sights and following through after each shot.

shooter clears his weapon properly.

In sustained fire the coach will observe that:

shooter checks for long rounds and puts ammunition in belt.

shooter checks out natural point of aim and does not move his feet when he rises.

sights are set correctly and score book is filled out properly.

shooter assumes a position quickly, calling out his target number, loads without fumbling, breathes properly and squeezes each shot without wasting time.

shooter clears his weapon and remains in position until told to rise.

SUMMARY QUESTIONS

1. What is the primary mission of the coach?
2. What is the most important part of sight picture?
3. How can the coach check the shooter's sight picture?
4. What are the methods of checking the shooter's trigger squeeze?
5. What is the coach's check list?

BIBLIOGRAPHY AND REFERENCES: FM 23-5, Army Field Manual, 1958.

UNIT 5

MECHANICAL TRAINING, U. S. CARBINE, CALIBER .30, M2

OBJECTIVE

To understand the nomenclature, disassembly, assembly, functioning, malfunctions, care and cleaning, and inspection of the U.S. Carbine, Cal. .30, M2.

INTRODUCTION

The U. S. Carbine, Cal. .30, M2, was developed to replace the pistol carried by most support troops in a combat organization. Today about half of the total personnel are armed with this weapon.

The U. S. Carbine, Cal. .30, M2, has short-range advantages over hand weapons. The Cal. .45 Pistol will only dent a steel helmet at one hundred yards. The Carbine, Cal. .30, ammunition will penetrate the helmet at the same distance.

The general specifications of the U. S. Carbine, Cal. .30, M2, are:

Weight with 15 rd. magazine unloaded	5.5 lbs.
Weight with 15 rd. magazine loaded	6.1 lbs.
Weight with 30 rd. magazine unloaded	5.53 lbs.
Weight with 30 rd. magazine loaded	6.6 lbs.
Overall length	35.58 in.
Cyclic rate of fire	750–775 rds. p.m.
Trigger pull	5–7 lbs.
Chamber pressure	40,000 psi.
Barrel length	18 in.
Maximum range	2,200 yds.
Maximum effective range	275 yds.
Muzzle velocity	1970 fps.

This weapon is a gas-operated, magazine-fed, air-cooled, shoulder weapon, designed to fire automatic or semiautomatic through the use of a selector. In figure 2-1, you will find an illustrated nomenclature

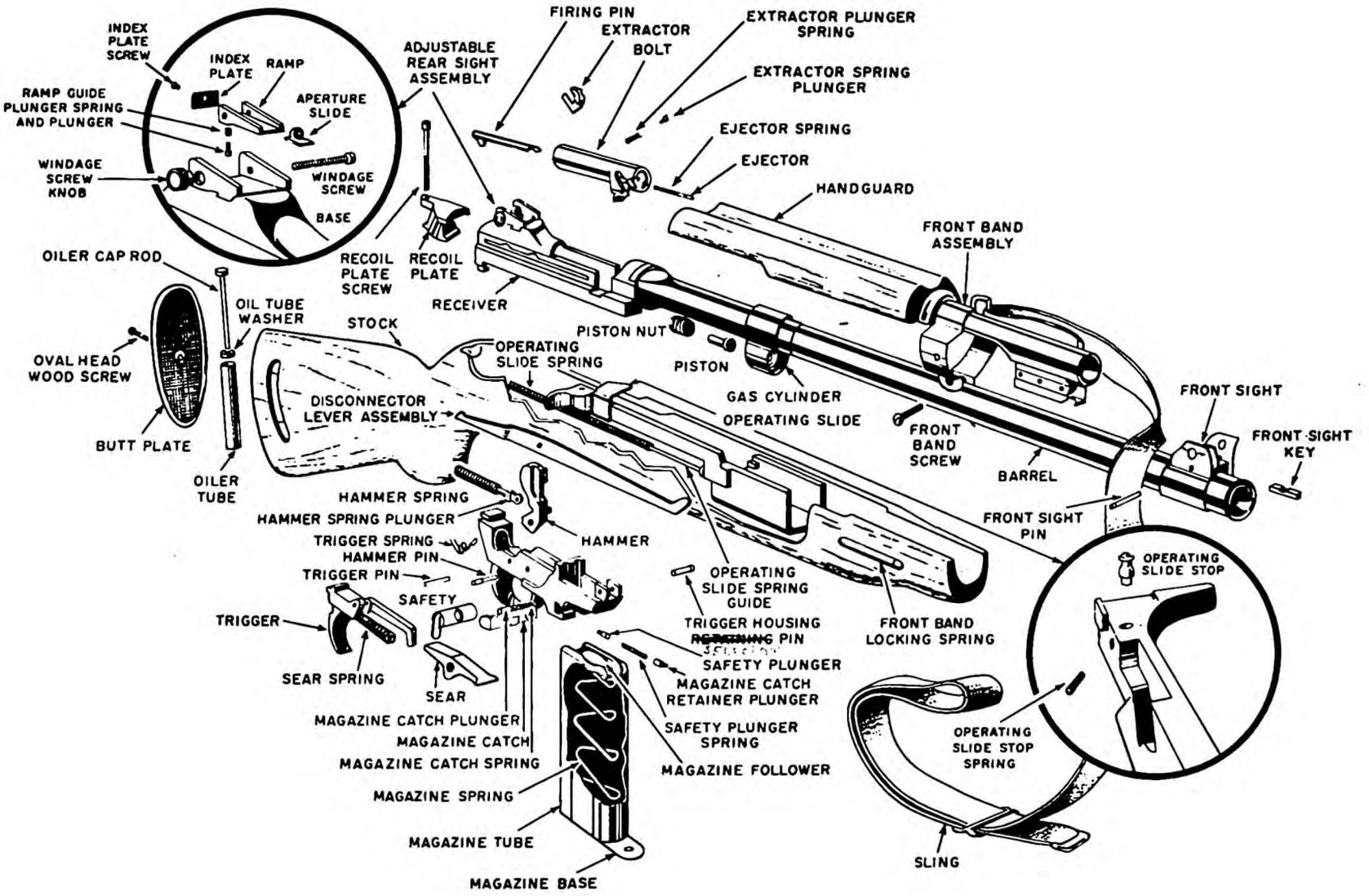

Figure 2-1. U.S. Carbine, Cal. .30, M2

breakdown of the U.S. Carbine, Cal. .30, M2. Locate and become familiar with these parts which will enable you to disassemble and assemble this weapon.

GENERAL

The individual airman is only allowed to disassemble the U.S. Carbine, Cal. .30, M2 to the extent called field-stripping. This amount of disassembly is all that is required for normal maintenance purposes. As an instructor, however, you should be familiar with detailed disassembly and assembly of this weapon and the names of the parts.

DISASSEMBLY (Field-Stripping)

To field-strip the Carbine, Cal. .30, M2, place the safety lever in the down position; grasp the magazine with the right hand; depress the magazine catch with the thumb and remove the magazine. The next step is to clear the weapon. This is done by pulling the operating slide to the rear and visually checking the chamber. Place the selector in the semiautomatic position. Now unsnap and remove the sling from the upper sling swivel. Allow the sling to hang from the lower sling swivel (oiler).

As you disassemble the weapon lay the parts down from left to right, as in figure 2-12.

To remove the wooden hand guard, you must slide the front band forward toward the muzzle end of the weapon. To do this, grasp the carbine with the left hand so that the front band screw head is pointing to your right. Now, with a coin or rim of a dummy cartridge loosen the front-band screw until all pressure on the front band is relieved. Depress the front-band locking spring and slide front-band assembly forward, disengaging it from the stock group and the hand guard. Move the hand guard forward until its rear end is disengaged from the groove in the front of the receiver. Remove the hand guard. (Fig. 2-2.)

Now separate the barrel and receiver group from the stock; grasp the small of the stock with the right hand and the barrel with the left hand; raise the muzzle end of the barrel (approx. 15°) until recoil plate is released from the receiver, then separate the barrel and receiver group from the stock group by lifting out of the stock group. (Fig. 2-3.)

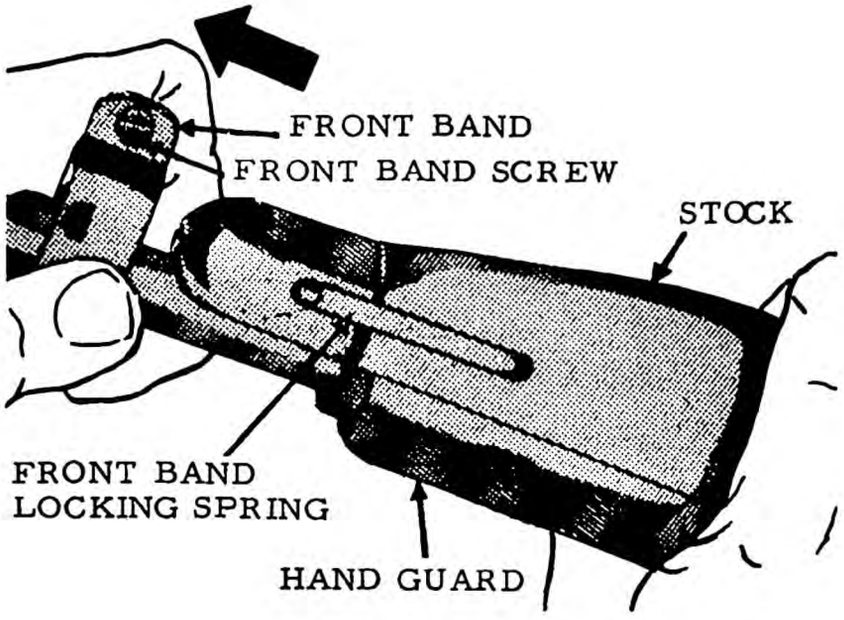

Figure 2-2. Sliding the front band forward.

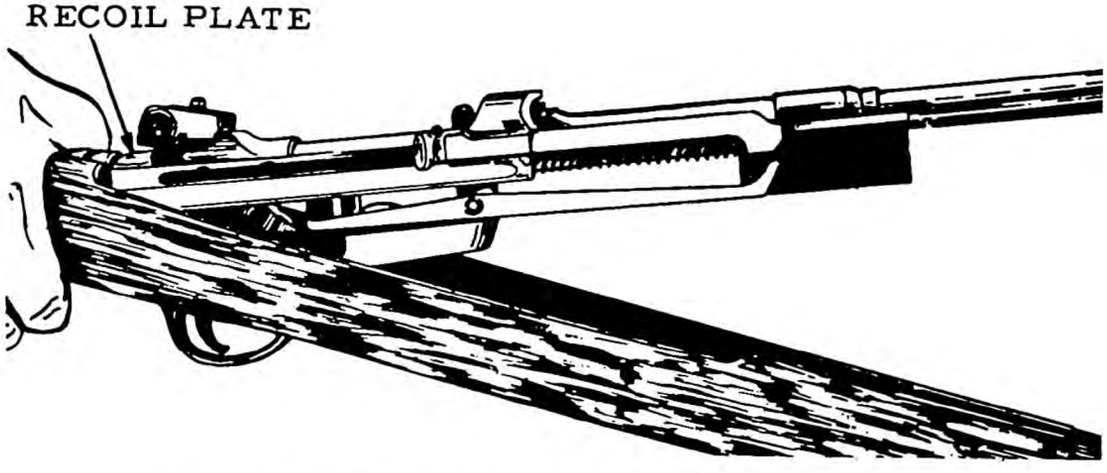

Figure 2-3. Separating the stock group and the barrel and receiver group.

In the next step, you will remove the operating slide spring and operating slide spring guide from the operating slide. Place the barrel and receiver group on a table, muzzle to your left with the sights down. Grasp the shoulder of the operating slide spring guide with the thumb and forefinger of the right hand. Steady the barrel and receiver with your left hand. Pull the operating slide spring and guide to the rear until the guide is released from the seat in the operating slide. Pull the operating slide spring and guide outward; withdraw the operating slide spring and guide

from the well in the receiver. Now separate the operating slide spring from the operating slide spring guide. (Fig. 2-4.)

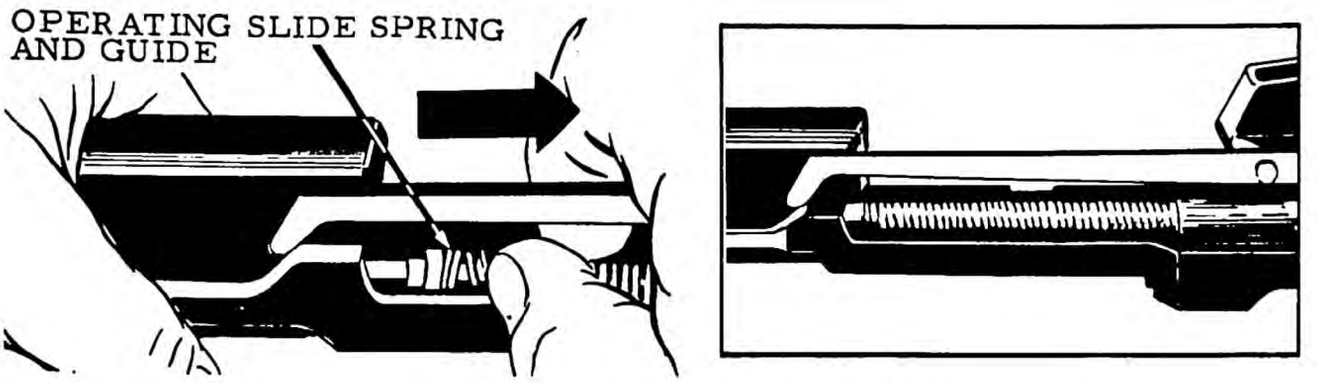

Figure 2-4. Removing the operating slide spring and guide.

To remove the selector and the selector spring, have the selector in the semiautomatic position (selector to the rear). Insert the point of the operating slide spring guide into the loop of the selector spring. Push the loop end downward to the dismount notch and remove the selector spring. Rotate the selector forward to the automatic setting and slide selector to the rear, disengaging the selector from the trigger and selector pin. (Fig. 2-5.)

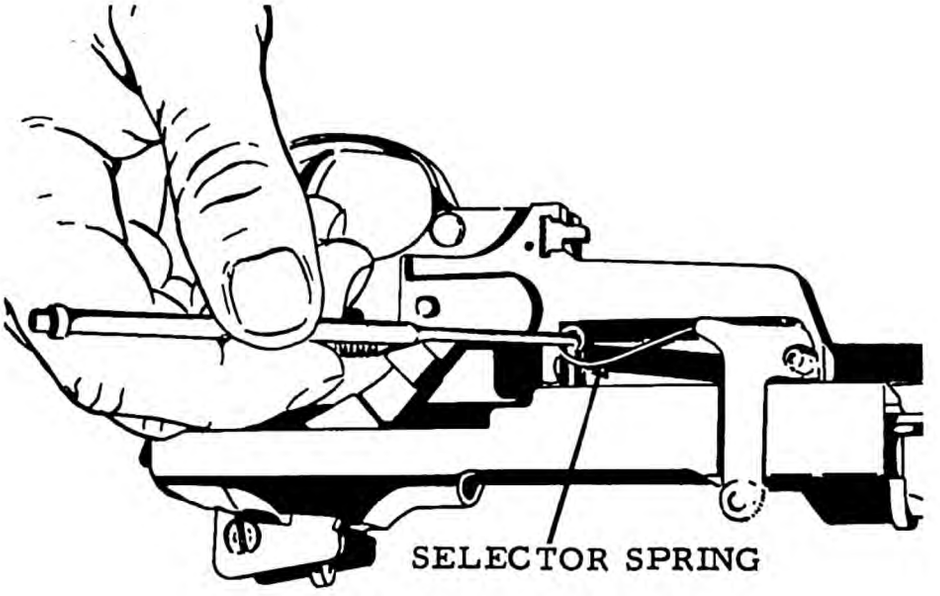

Figure 2-5. Removing the selector spring.

Push on the trigger and selector pin to unseat the disconnector lever assembly and rotate the crank forward, disengaging the rear end of the disconnector lever. Now, remove the disconnector lever assembly. (Figs. 2-6 & 2-7.)

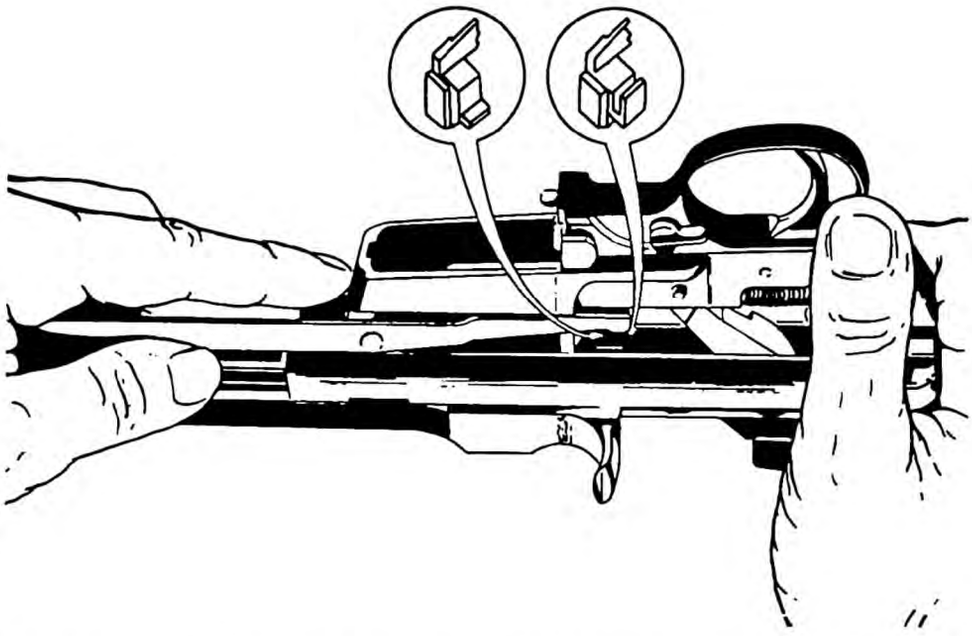

Figure 2-6. Removing the disconnector lever assembly.

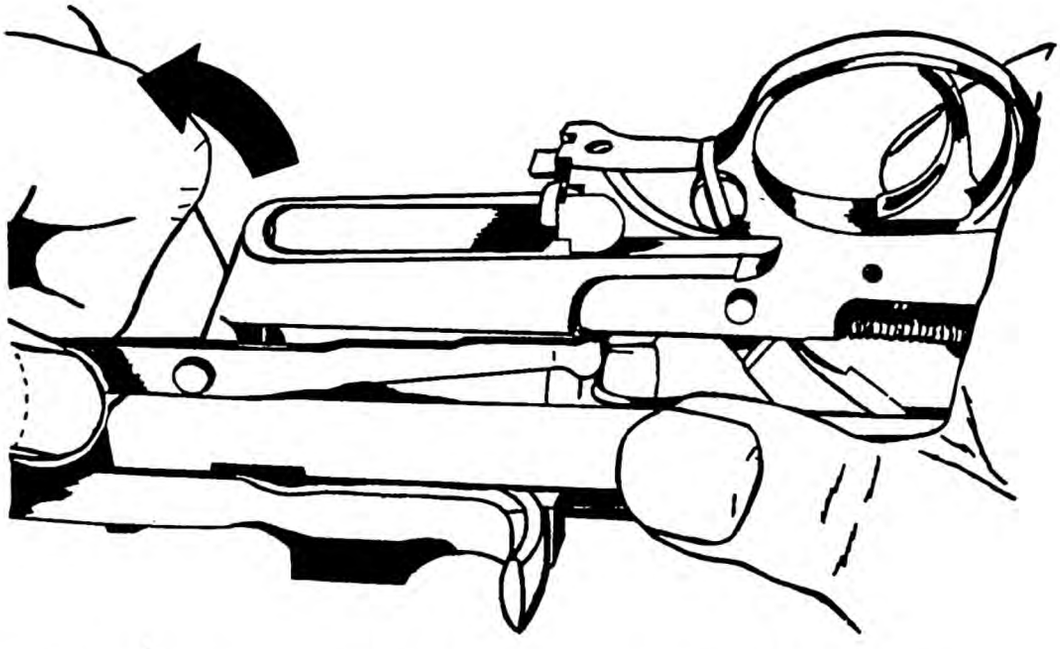

Figure 2-7. Removing the disconnector lever assembly.

You are now ready to remove the trigger-housing group from the barrel and receiver group. Make sure the hammer is in the cocked position by pulling the operating slide handle to the rear, and then pushing it forward again.

Grasp the trigger-housing group with the right hand; steady the barrel and receiver group with the left hand, keeping the sights up. Pull the trigger-housing group to the rear, disengaging its retaining lug from the corresponding grooves in the receiver being careful not to lose the disconnector plunger and spring. (Fig. 2-8.)

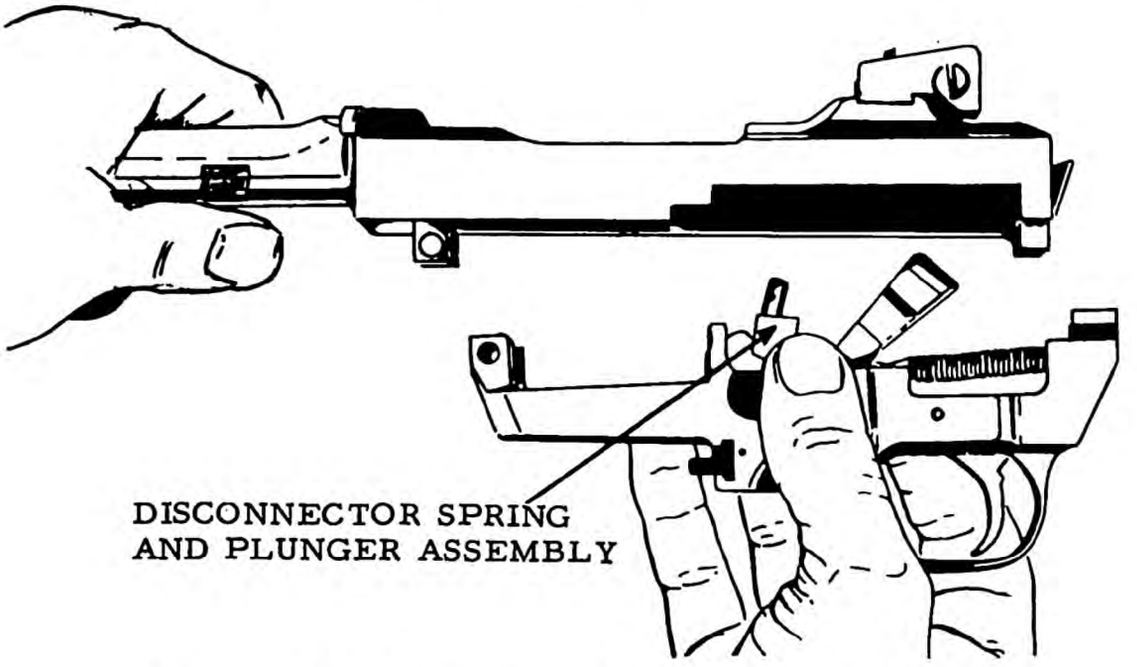

Figure 2-8. Removing the trigger housing group.

Rest the barrel on the table, muzzle forward with sights up, placing the rear of the receiver in the left hand. Grasping the operating slide handle with the right-hand thumb and forefinger, pull the operating slide handle to the rear until the lug on the inside of operating slide handle is aligned with dismounting notch in the operating groove of the receiver. Pull operating slide handle up and out, disengaging slide handle from bolt operating lug. Now with the right hand grasp the large portion of the slide (inertia block). Move the slide forward approximately 1/4 in. This will place left-front lug on the inertia block section of the slide opposite the relief cut in the guiding groove under the left side of the barrel. Rotate the inertia block counterclockwise; this will allow the left-front lug on the inertia block section of the operating slide to move through the relief cut and disengaging the operating slide from the barrel and receiver group. (Figs. 2-9 & 2-10.)

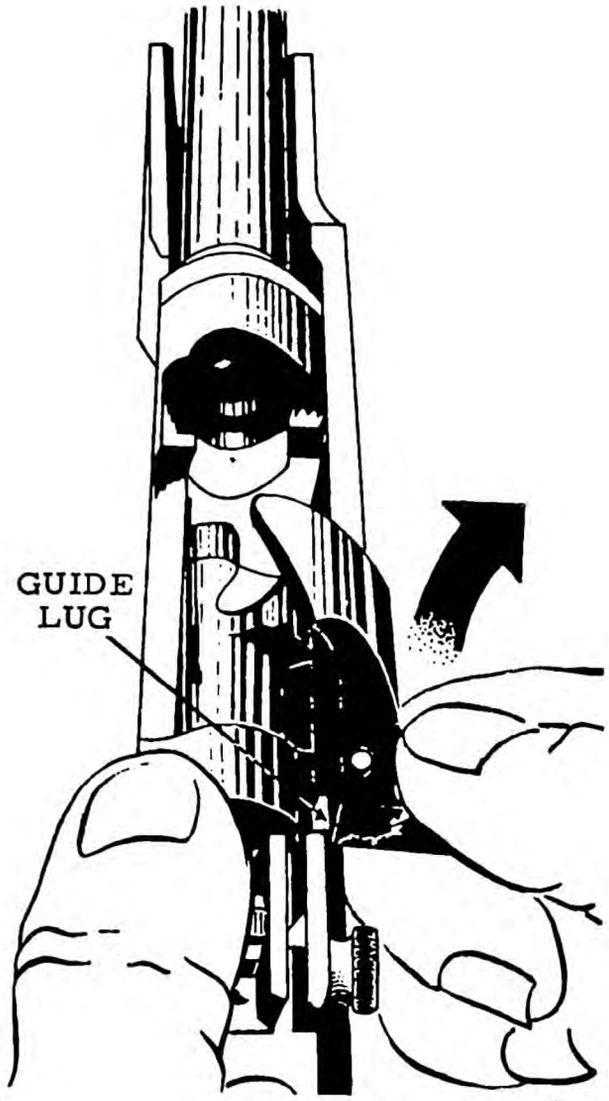

Figure 2-9. Removing the operating slide (a).

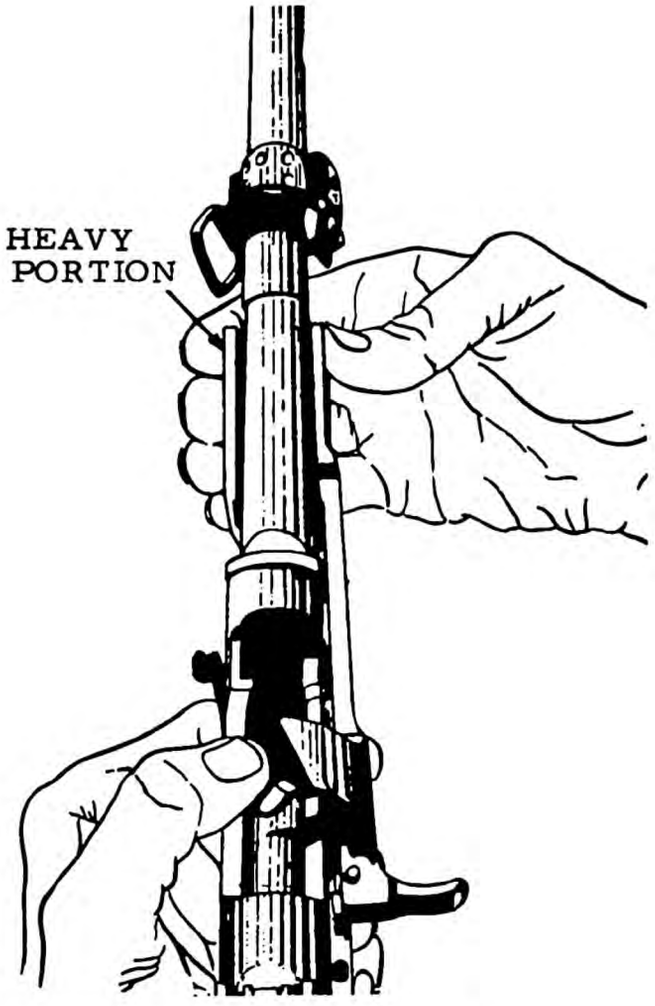

Figure 2-10. Removing the operating slide (b).

Now you will remove the bolt from the receiver. Hold the rear of the receiver in the left hand, muzzle forward, sights up. Grasp the operating lug of the bolt with the thumb and forefinger of the right hand. Move the bolt to the rear until the face of the bolt is just behind the locking recess in the receiver. Raise the front of the bolt and rotate counterclockwise until the locking lug is disengaged from the receiver, then rotate the bolt clockwise until firing-pin tang is aligned with notch in the bridge of the receiver. Lift the bolt from the receiver. (Fig. 2-11.)

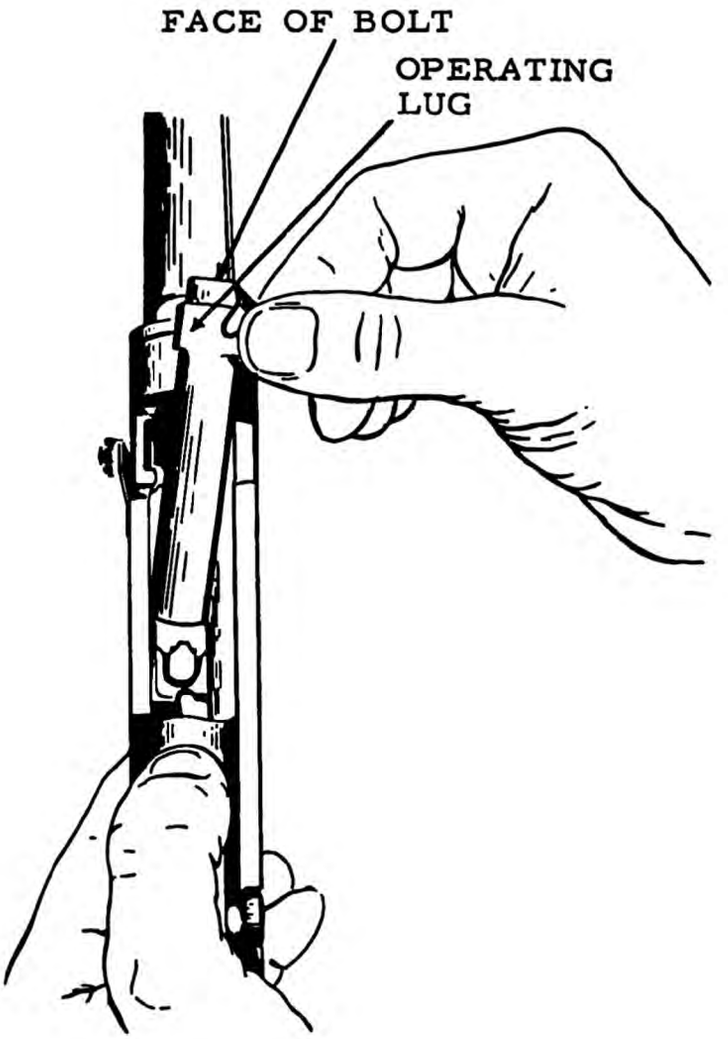

Figure 2-11. Removing the bolt.

The carbine is now field-stripped. (Fig. 2-12.) Study and memorize the names of the parts.

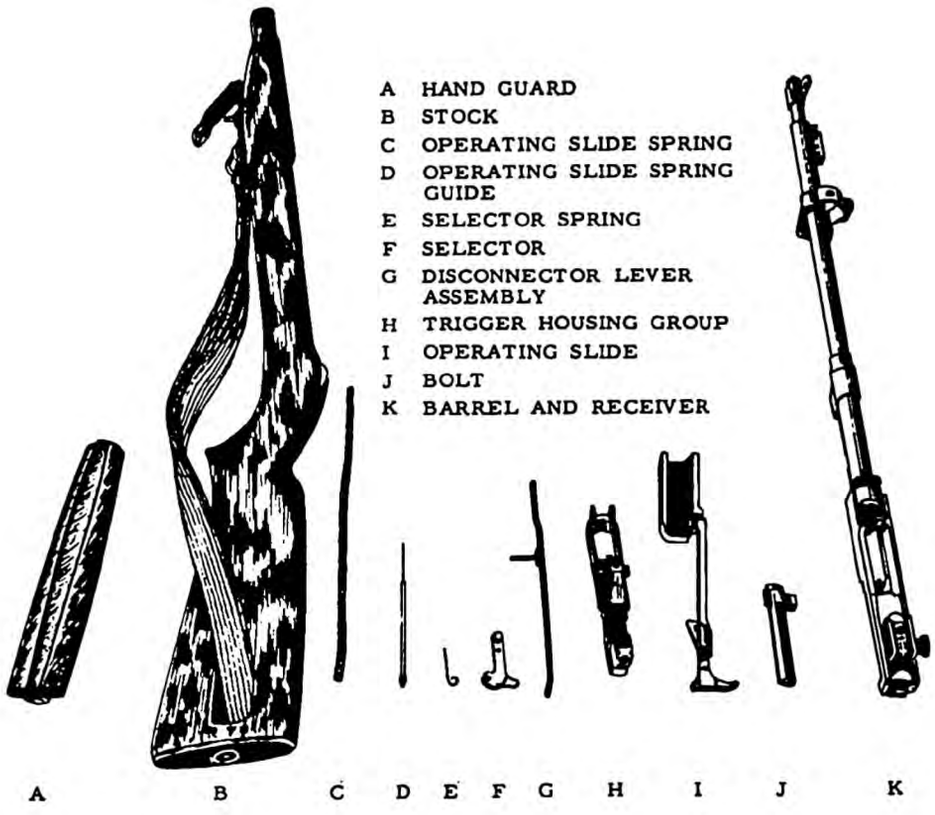

Figure 2-12. Layout of parts in field-stripping.

ASSEMBLY

The assembly of the carbine is accomplished in the reverse order of disassembly. You must be sure not to force any moving parts.

To replace the bolt, grasp the operating lug of the bolt with the thumb and forefinger of the right hand. Lift the rear of the receiver with the left hand, making sure the muzzle is pointing away from you with the sights up. Place the rear of the bolt so that the firing-pin tang is aligned with the notch in the bridge of the receiver. Lower the bolt, rotating the bolt counterclockwise until the left locking lug is engaged in the receiver groove. Slide the bolt to the rear.

Now replace the operating slide, positioning the bolt so that the face of the bolt is approximately 1 1/2 in. from the chamber. Holding the bolt in place with the left thumb, grasp the inertia block of the operating slide in the palm of the right hand; engage the operating lug of the bolt in the camming recess in the hump of the operating slide. Align the left guide lug of the inertia block with the relief cut in the groove on the left underside of the barrel. Then by rotating the operating slide to the right

(clockwise) engage the two guide lugs in their grooves in the barrel. Move the operating slide and bolt to the rear until the operating slide-handle guide lug engages in the dismount notch and is seated into its guide groove in the receiver. Move the operating slide forward, closing the bolt. (Figs. 2-13 & 2-14.)

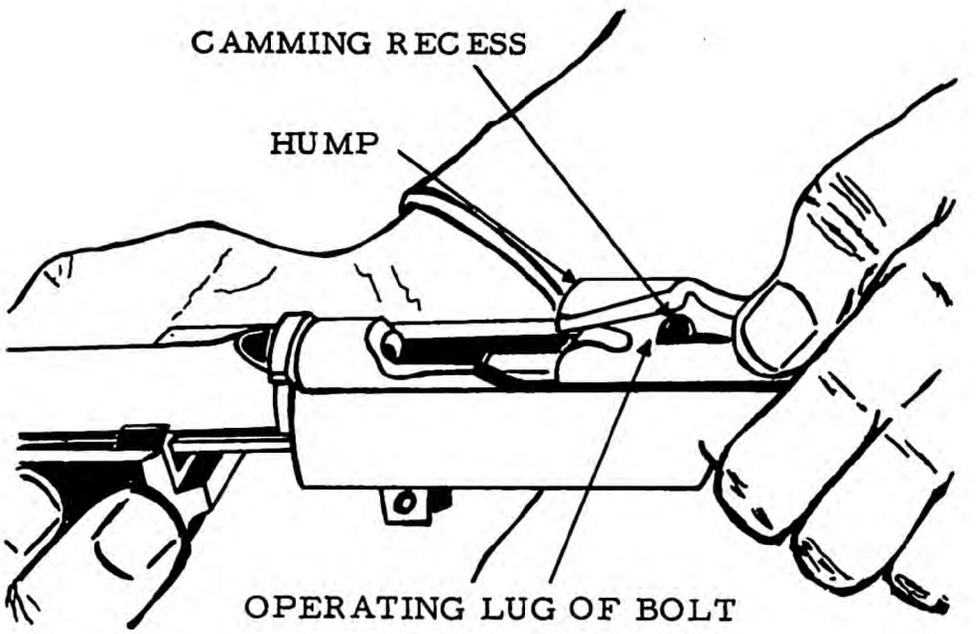

Figure 2-13. Replacing the operating slide (a).

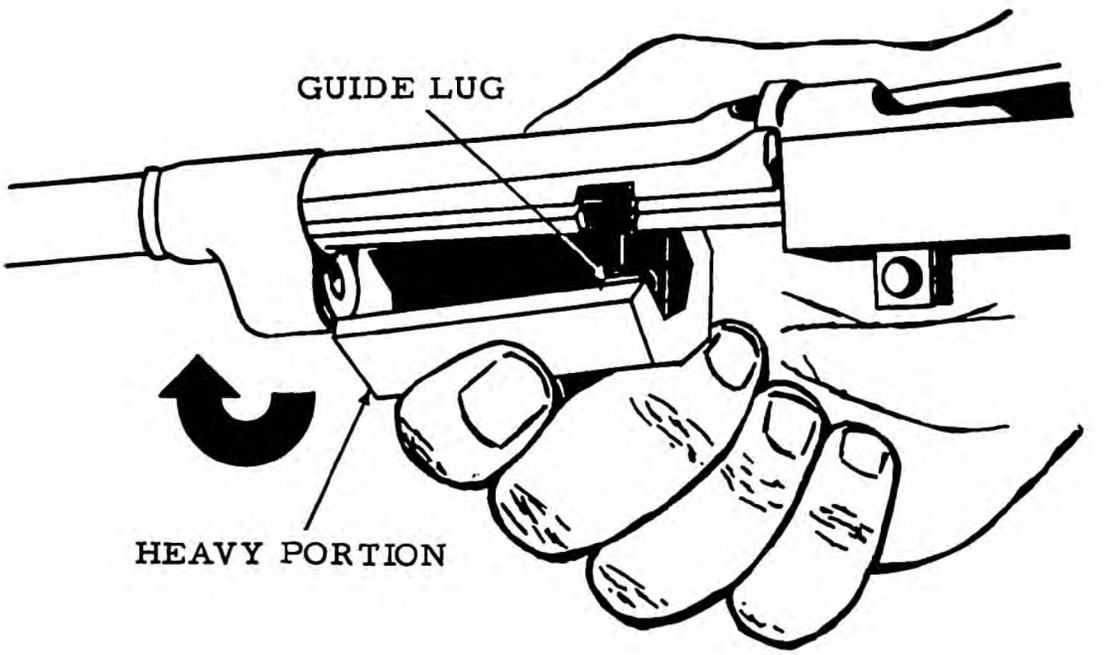

Figure 2-14. Replacing the operating slide (b).

To replace the trigger housing, hold the barrel and receiver group with the left hand, muzzle forward and sights to the left. Pick up the trigger-housing group with the right hand; engage the retaining (T lug) with its corresponding grooves in the receiver from front to rear, making sure the disconnector seats properly in the deep-cut portion of the receiver bridge. Align the trigger-housing retaining pinhole with the holes in the receiver. Hold trigger-housing group in place with the fingers of the left hand. With the right hand, insert the trigger-housing and selector pin. Make sure the crank of the disconnector lever assembly is rotated forward and the toe of the disconnector lever is pointed toward the muzzle.

You will have no trouble seating the disconnector lever assembly if the disconnector has a plain shoulder. (Fig. 2-6.) If the disconnector has a slotted groove, press inward on the rear of the disconnector lever and align the rear end of the lever with the slot of the disconnector. Pull the front end of the disconnector lever away from the operating slide. Now, rotate the disconnector lever to the rear, engaging its rear end in the disconnector groove. (Fig. 2-15.)

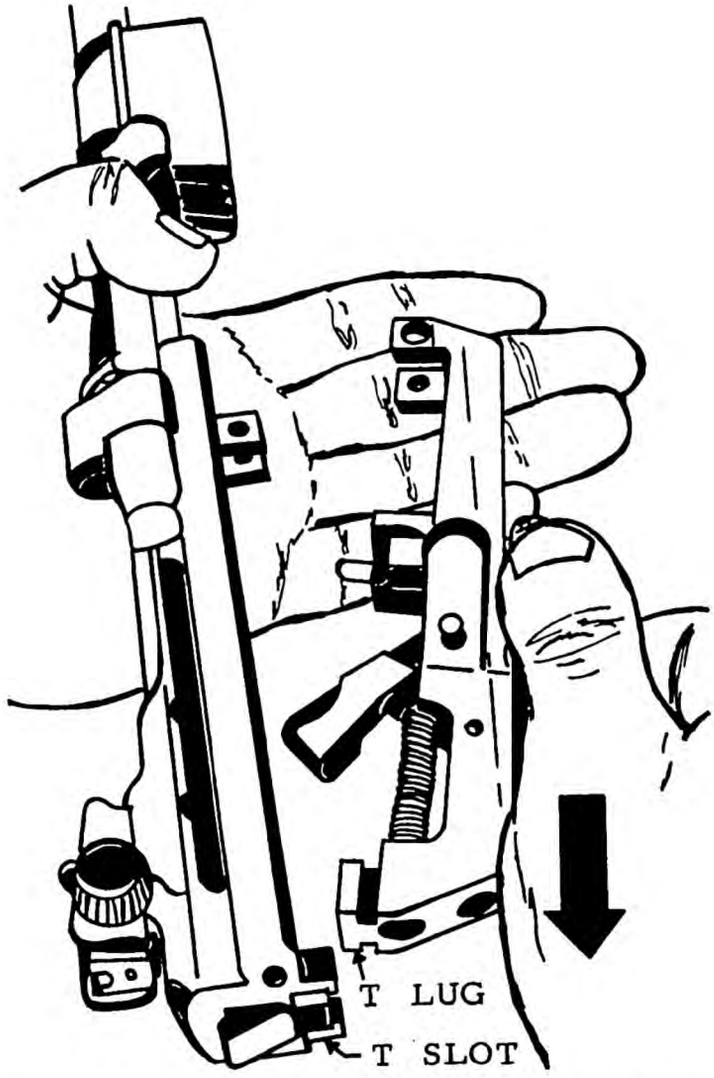

Figure 2-15. Replacing the trigger-housing group.

Place the barrel and receiver on a level surface with the muzzle pointing left and sights down. Engage the slotted portion of the selector with the straddle slot on the end of the trigger-housing and selector pin. Rotate the selector to the rear. Replace the selector spring by inserting its straight end into the recess in the rear of the selector. (Loop of the selector spring points toward trigger guard.) Place the loop end of the spring in its dismount notch at the top of the groove on the trigger-housing post. Pull the loop end up, seating the selector spring. (Fig. 2-16.)

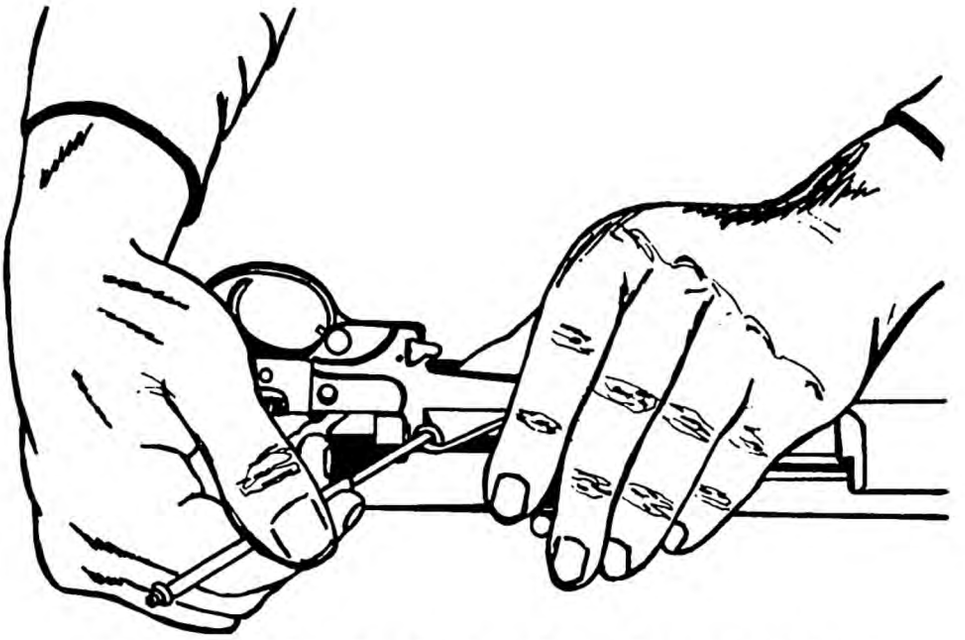

Figure 2-16. Replacing the selector spring.

Place the weapon on a table with the muzzle pointing to your left, sights down. Grasp the operating slide spring in the right hand and place it on the operating slide-spring guide. Insert the loose end of the operating slide spring into the well of the receiver. With the left hand, grasp the barrel and inertia block of the operating slide. With the thumb and forefinger of the right hand, grasp the shoulder of the operating slide-spring guide; compress the operating slide spring and seat the operating slide-spring guide into its recess in the inertia block of the operating slide. (Fig. 2-4.)

Holding the small of the stock in the right hand, grasp the barrel and receiver group in the left hand. Lower the rear of the receiver group into the stock group, keeping the barrel elevated at a 15° angle. As soon as the retaining lug on the rear of the receiver is engaged in the recoil plate, lower the barrel into its bed in the stock group. Do not force the barrel into its bed. It should fit without any undue pressure being applied. (Fig. 2-3.)

To replace the hand guard, lay the carbine on the table with the sights up. Place the hand guard liner in the groove in the receiver. Lock the barrel and receiver group to the stock group and the hand guard together by sliding the front-band assembly down over the forward end of the hand guard and stock. (Fig. 2-2.) Tighten front-band locking screw.

Attach the forward end of the sling to the upper-sling swivel. You have now completed the disassembly and assembly, (field-stripping), of the U.S. Carbine, Cal. .30, M2.

Now, check for correct assembly by grasping the weapon with the left hand, pointing the muzzle away and into the air. Place the selector in the semiautomatic position (to the rear). With the thumb and forefinger of the right hand, pull the operating slide to the rear, visually clearing the weapon. Let the operating slide go forward; it should go to its foremost position. Place the safety on and apply pressure to the trigger. The hammer should not go forward. Release the safety and pull the trigger; the hammer should go forward. You have checked the carbine for semiautomatic fire. To check for automatic fire, push the selector forward (automatic setting). Hold the trigger to the rear and pull the operating slide to the rear. Ease the operating slide forward; the hammer should fall after the bolt has rotated and locked and the slide is in its final 5/16 in. of forward movement. You have now checked the carbine for proper functioning of automatic fire. Place the safety to "SAFE" position and lock the operating slide to the rear.

DETAIL DISASSEMBLY AND ASSEMBLY (U.S. Carbine, Cal. .30, M2)

To perform detail disassembly of the carbine, we must first clear the weapon (safety, magazine, slide). Next break the weapon down into its groups (field-strip).

DISASSEMBLY OF THE TRIGGER-HOUSING GROUP

Squeeze the trigger, easing the hammer forward to the fired position.

Insert the pointed end of the operating slide spring guide into the eye of the hammer spring plunger, from right to left. Pull back until plunger is clear of the notch in the hammer and swing hammer spring and plunger to the right to clear the hammer. Remove the hammer spring and hammer spring plunger. (Be careful not to bend the operating slide spring guide, when using it as a disassembly tool.) (Fig. 2-17.)

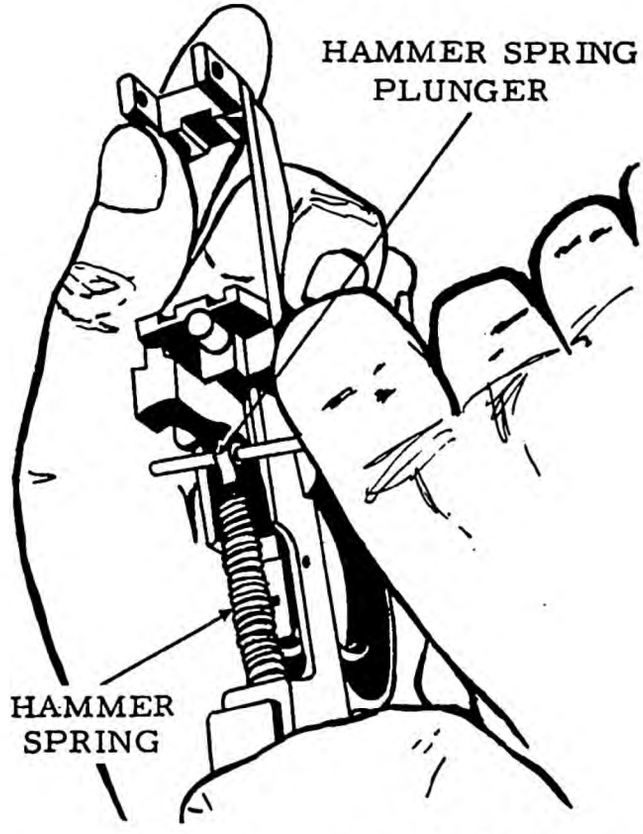

Figure 2-17. Removing the hammer spring and hammer spring plunger.

Using the operating slide-spring guide as a tool, drift out the hammer pin from right to left. (Fig. 2-18.) Remove hammer and disconnector.

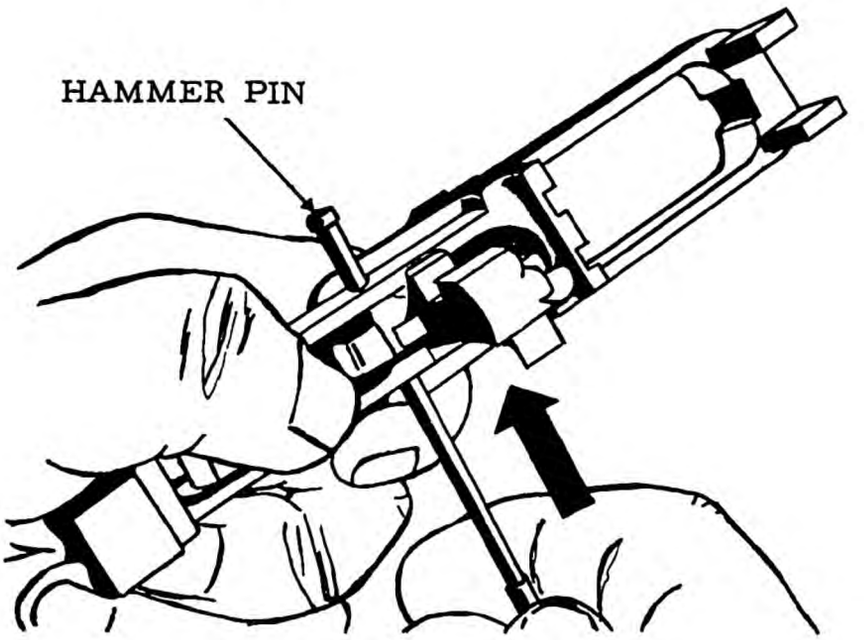

Figure 2-18. Removing the hammer pin.

Pressing down on the sear with the left thumb, drift out the trigger pin from right to left. (Fig. 2-19.) Slowly release the spring tension on the sear and turn the trigger housing upside-down. Allow the sear and sear spring to fall out.

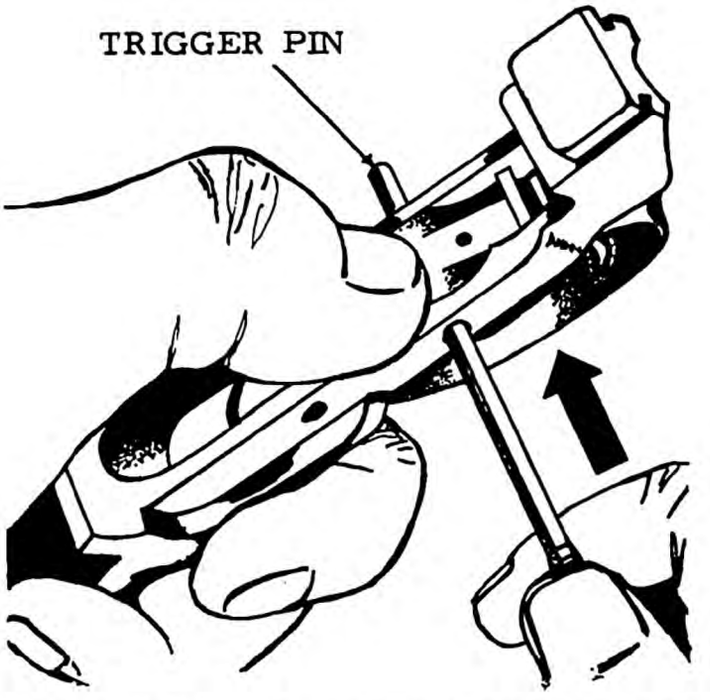

Figure 2-19. Removing the trigger pin.

Hold the trigger housing as shown in figure 2-20. Move the trigger forward, then rotate the rear of the trigger upward and forward out of the top of the trigger housing. Remove the trigger spring from the trigger housing during this step.

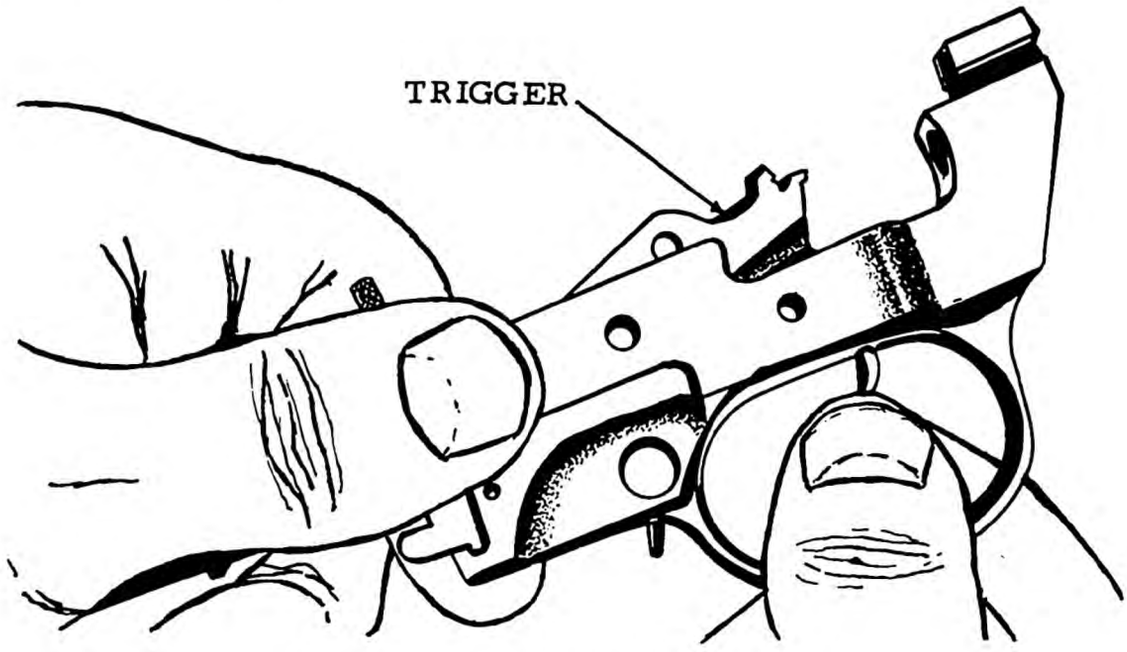

Figure 2-20. Removing the trigger.

Hold the trigger housing in the left hand as shown in figure 2-21. Insert the operating slide spring into the hole in the lower face of the trigger housing, just forward of the bow. Engage the operating slide spring guide forward of the shoulder of the magazine catch retainer plunger and pull the plunger backwards. Place the thumb against the magazine catch to prevent the magazine catch and the magazine catch plunger assembly, (fig. 2-21) from flying out. Remove the magazine catch and magazine catch plunger assembly

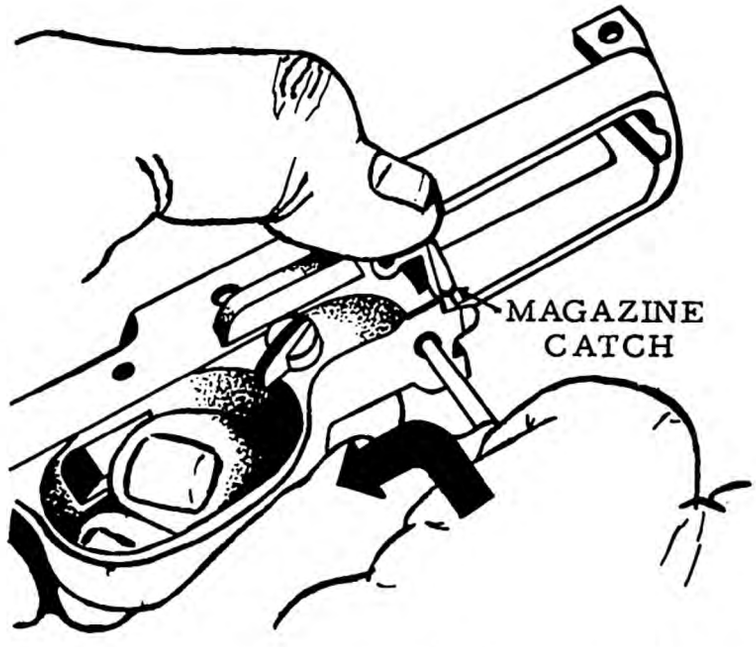

Figure 2-21. Removing the magazine catch.

from the trigger housing (fig. 2-22).
Remove the magazine catch retainer plunger assembly with the safety plunger attached (fig. 2-23).
Remove the safety from its aperture (fig. 2-24).

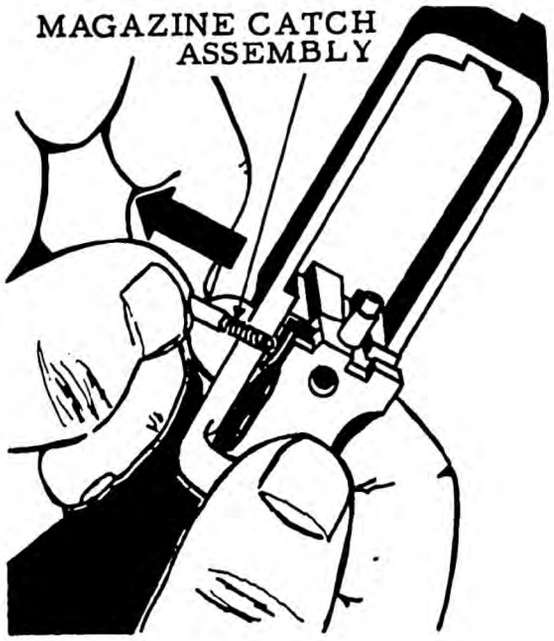

Figure 2-22. Removing the magazine catch plunger assembly.

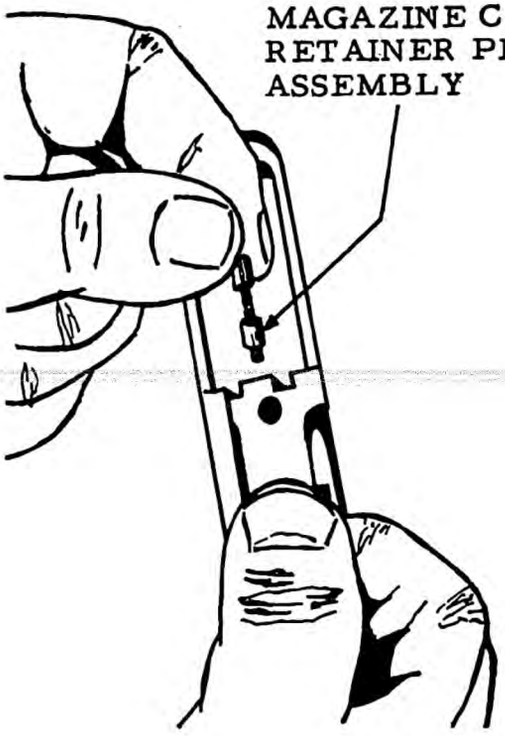

Figure 2-23. Removing the magazine catch retainer plunger assembly.

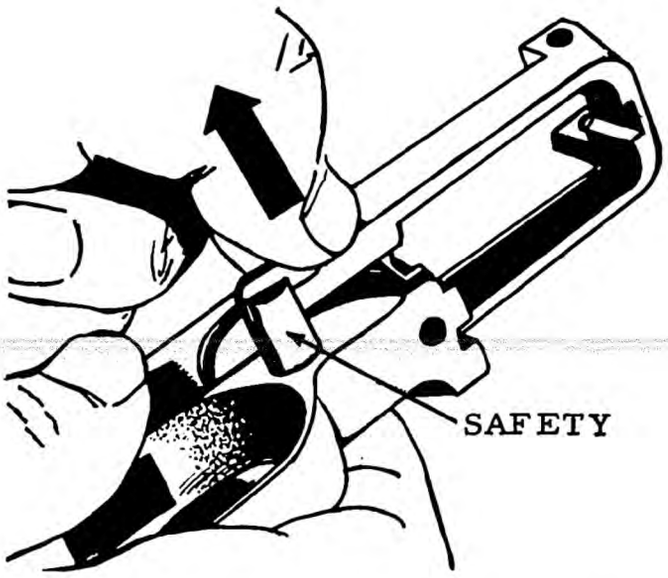

Figure 2-24. Removing the safety.

You now have the trigger-housing group disassembled. Lay out the parts as shown in figure 2-25.

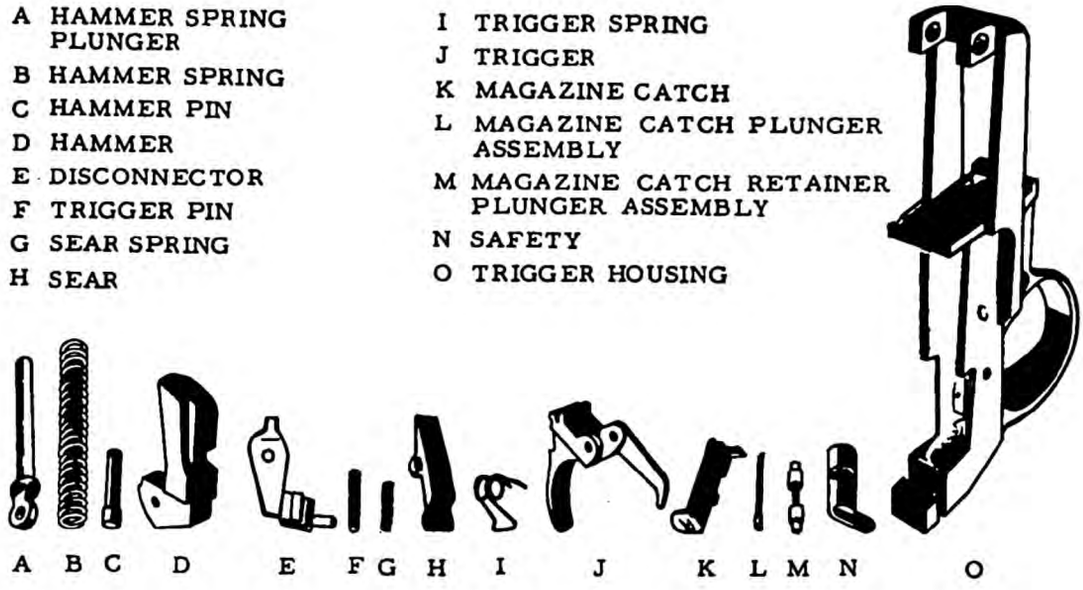

Figure 2-25. Layout of the parts of the trigger-housing group.

ASSEMBLY OF THE TRIGGER-HOUSING GROUP

Insert the safety into its aperture in the trigger housing with the trigger notch pointing to the rear.

If you separated the magazine catch retainer plunger, safety plunger, and magazine catch retainer plunger spring, assemble these parts now. The two plungers are identical. Insert this assembly into its aperture in the magazine catch guide groove.

Insert the magazine catch spring and plunger in its well in the trigger housing. The loose end of the magazine catch spring is inserted first, with the plunger facing outward. Replace the magazine catch into its guide groove in the forward face of the trigger housing with the finger piece facing to the rear. Move the magazine catch to the left against its plunger. Grasp the trigger housing as shown in figure 2-26. Pull the magazine catch retainer plunger back into the aperture in the trigger housing and, at the same time, push the magazine catch completely to the left. The magazine catch retainer plunger will click into position in its recess in the magazine catch, holding the magazine catch in its guide groove.

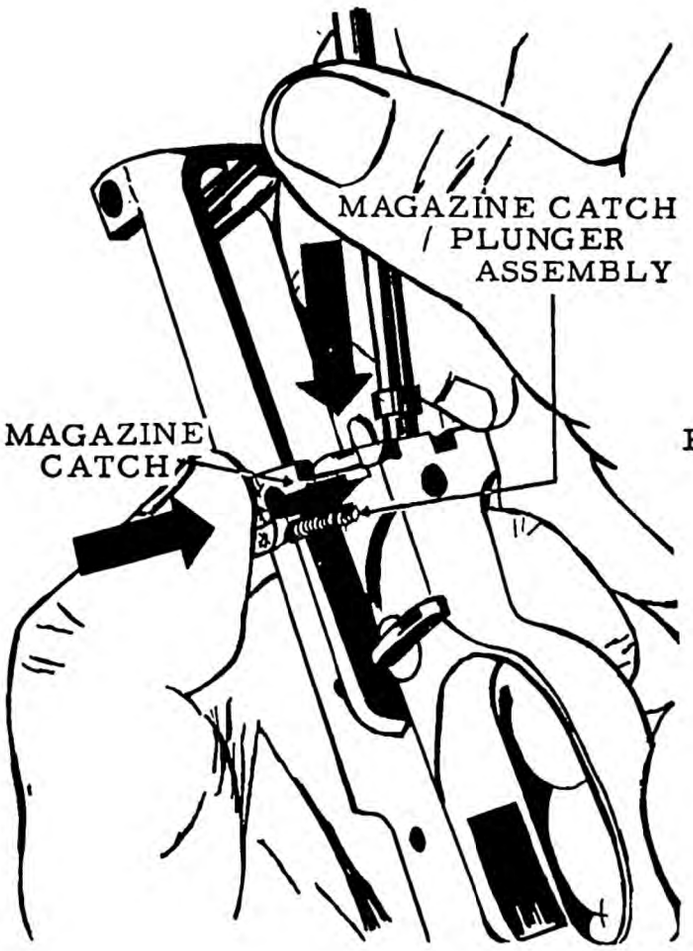

Figure 2-26. Replacing the magazine catch.

Hold the rear of the trigger-housing group in your left hand. Grasp the long forward end of the trigger with the right thumb and forefinger. Hold the trigger level and place it down into the trigger-housing group with the finger piece projecting part way through the floor of the trigger housing. Grasp the finger piece with the thumb and forefinger of the left hand which is holding the trigger-housing group (fig. 2-27).

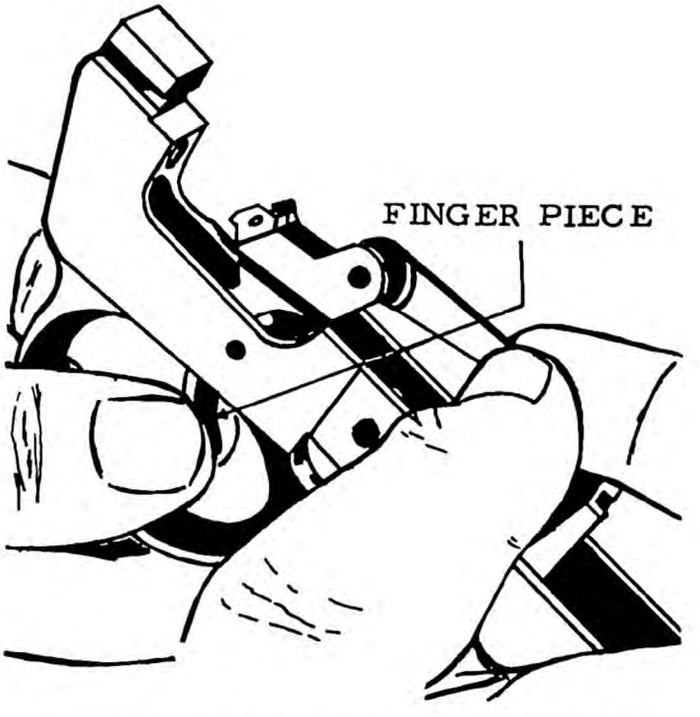

Figure 2-27. Replacing the trigger.

Position the trigger spring to the rear of the trigger so that the loop end rests in the slot in the rear top-face of the trigger. The prongs of the spring point upward and bear on the upper edge of the trigger spring aperture (fig. 2-28). This aperture is the lower of the two apertures in the rear of the trigger housing. With the right forefinger over the trigger and trigger spring to hold them in position, press down and to the rear, allowing the finger piece of the trigger to rotate forward and upward. When the coils of the spring are seated in the aperture, pull back on the finger piece of the trigger to seat it in the trigger housing. Do not pull back on the trigger until the coils of the spring are seated, or the trigger spring will fly out. Aline the trigger pinholes in the trigger and trigger housing; then insert the trigger pin from the left side just far enough to hold the trigger in position.

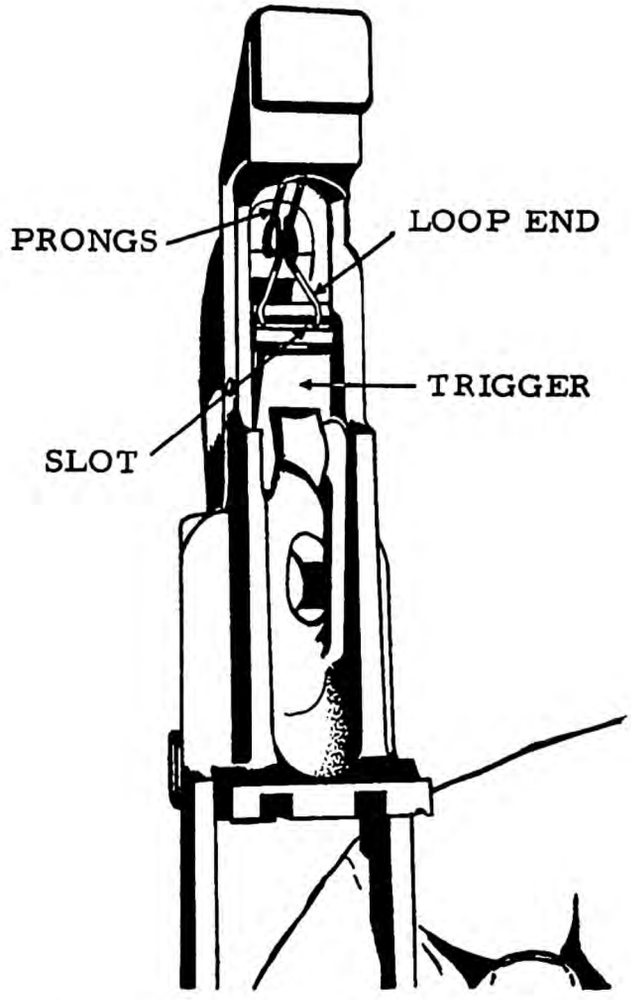

Figure 2-28. Trigger spring in proper position.

Insert the sear spring in the forward face of the trigger. Place the sear in position on top of the trigger, with the raised shoulder up and pointing toward the front of the trigger housing. The free end of the sear spring must be seated in the rear face of the sear. Hold the trigger-housing group in the left hand as shown in figure 2-29, with the forefinger pressing against the trigger pin. Force the sear to the rear by applying pressure against its raised shoulder with the operating slide spring guide. At the same time, maintain pressure against the rear of the sear with a finger of the right hand and aline the trigger pinholes. Seat the trigger pin.

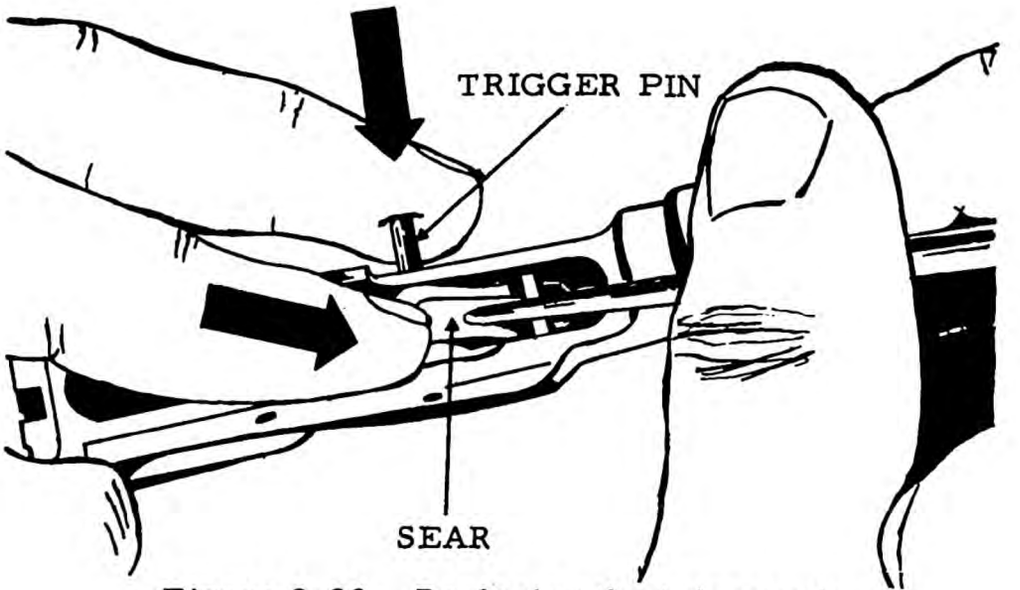

Figure 2-29. Replacing the trigger pin.

Replace the disconnector, making sure that its rear end is on top of the sear (fig. 2-30). Replace the hammer with its long end up and curving to the rear (fig. 2-31). Engage the sear notch of the hammer with the sear nose and rotate the hammer to its rearward (cocked) position. Align the hammer pinholes and replace the hammer pin. The operating slide spring guide may be used to aline the hammer pinholes.

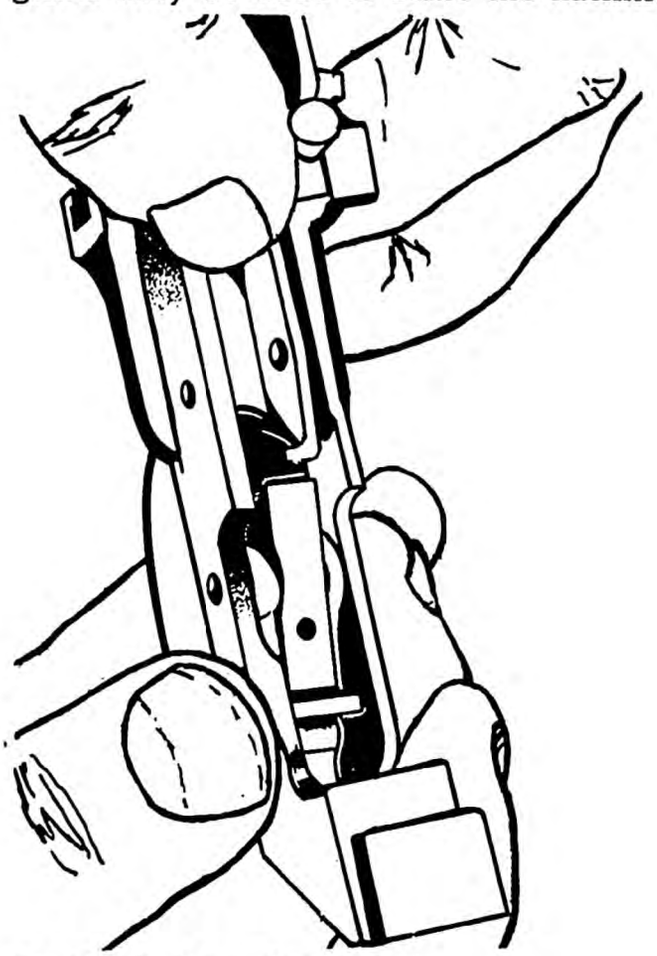

Figure 2-30. Replacing the disconnector.

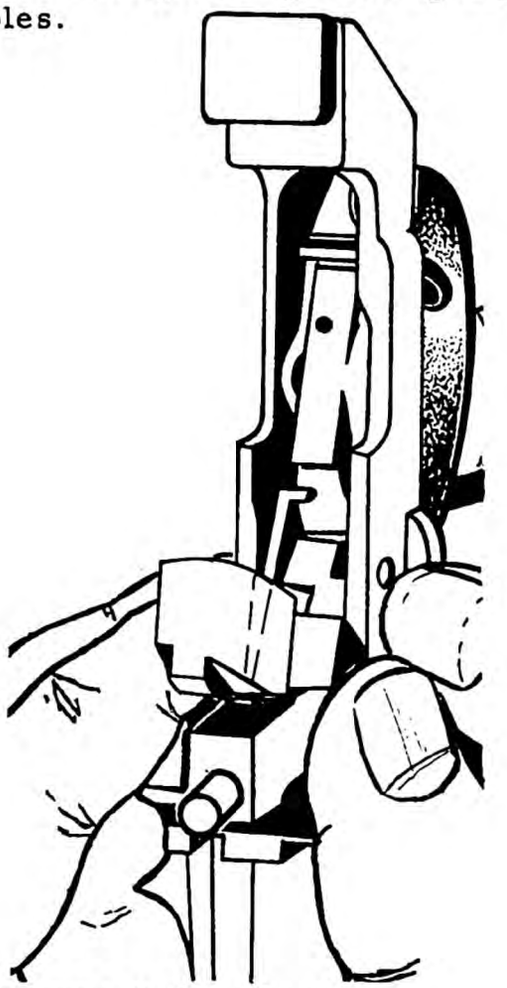

Figure 2-31. Replacing the hammer.

Squeeze the trigger and move the hammer forward to its fired position. Assemble the hammer spring and hammer spring plunger. Seat the free end of the hammer spring in its well in the trigger-housing group with the head of the hammer spring plunger on the right side of the hammer. Insert the operating slide spring guide into the hole in the hammer spring plunger. Pull the hammer spring plunger back against the force of the hammer spring and seat it into the well in the hammer.

DISASSEMBLY OF THE OPERATING SLIDE

Grasp the operating slide as shown in figure 2-32. Using the operating slide spring guide, push out the operating slide stop, small end first.

Remove the operating slide stop spring from the well in the operating slide.

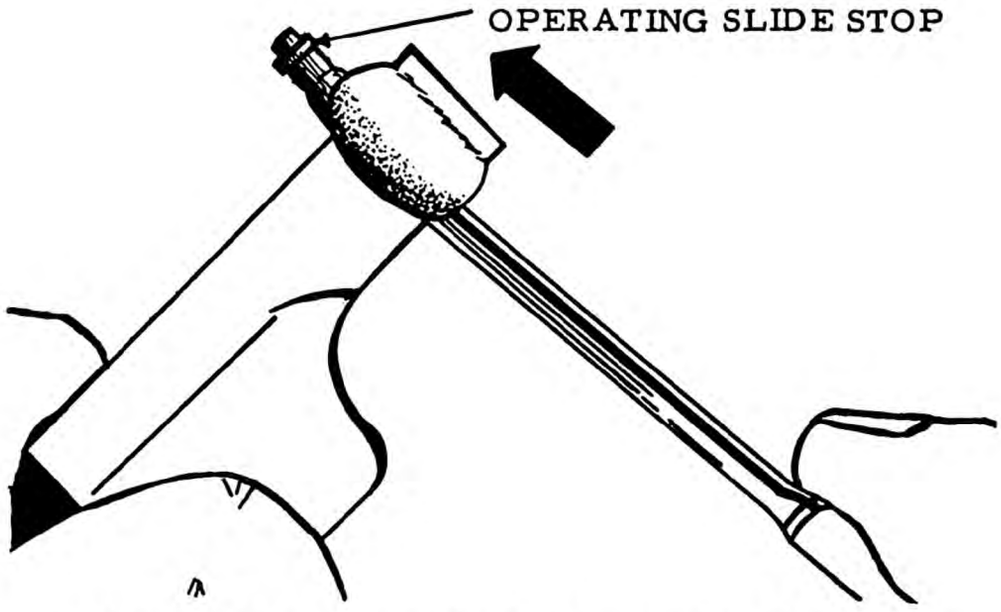

Figure 2-32. Removing the operating slide stop.

ASSEMBLY OF THE OPERATING SLIDE

Replace the operating slide stop spring onto its well in the rear of the slide.

Replace the operating slide stop, large end first, into the bottom of its well. Using the operating slide spring guide, depress the operating slide stop spring and seat at the operating slide stop.

DISASSEMBLY OF THE BOLT

Place the bolt into bolt disassembly tool, #7313298, figure 2-33, with the unslotted tang of the tool pawl resting under the bevel of the extractor plunger. While pressing down on the unslotted tang of the tool pawl to make certain that it stays under the bevel of the extractor plunger, turn the thumb screw until the extractor plunger is depressed, making it possible to remove the extractor by forcing it out through the hole in the bolt tool.

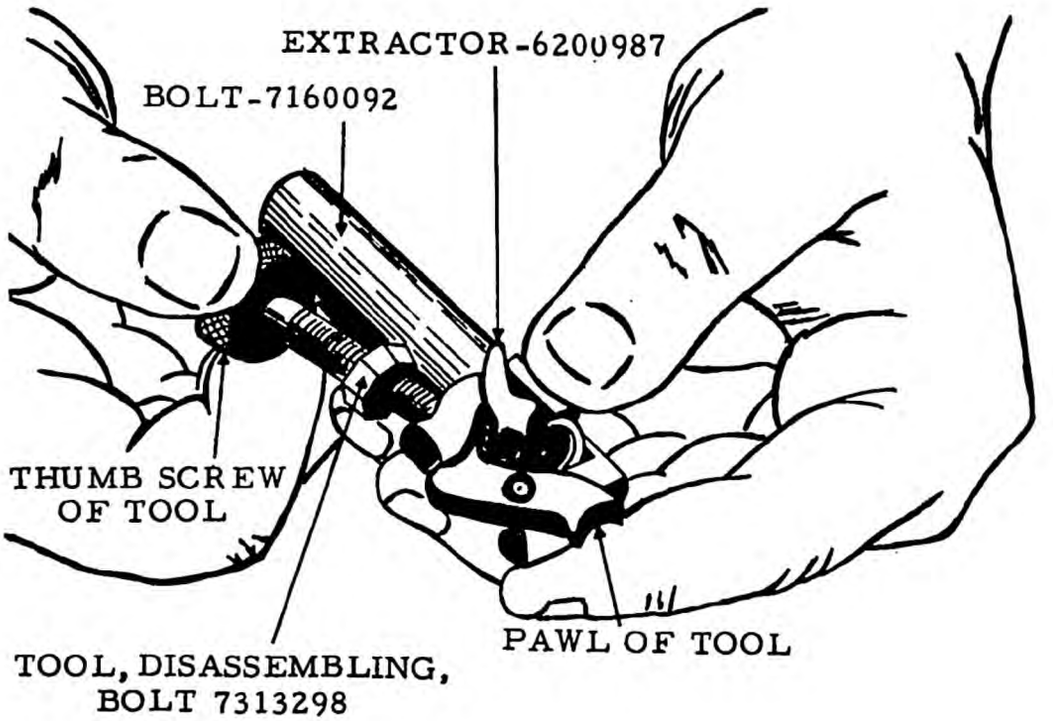

Figure 2-33. Disassembling bolt.

CAUTION: If the tang of the tool pawl is not kept under the bevel of the extractor plunger, it will come in contact with the straight portion of the plunger shaft and continued pressure of the thumb screw will cause the tang of the tool pawl to snap off.

Remove tool slowly, keeping finger over tang of firing pin and ejector plunger, to keep ejector plunger from popping out. Disassemble the bolt. (Fig. 2-34.)

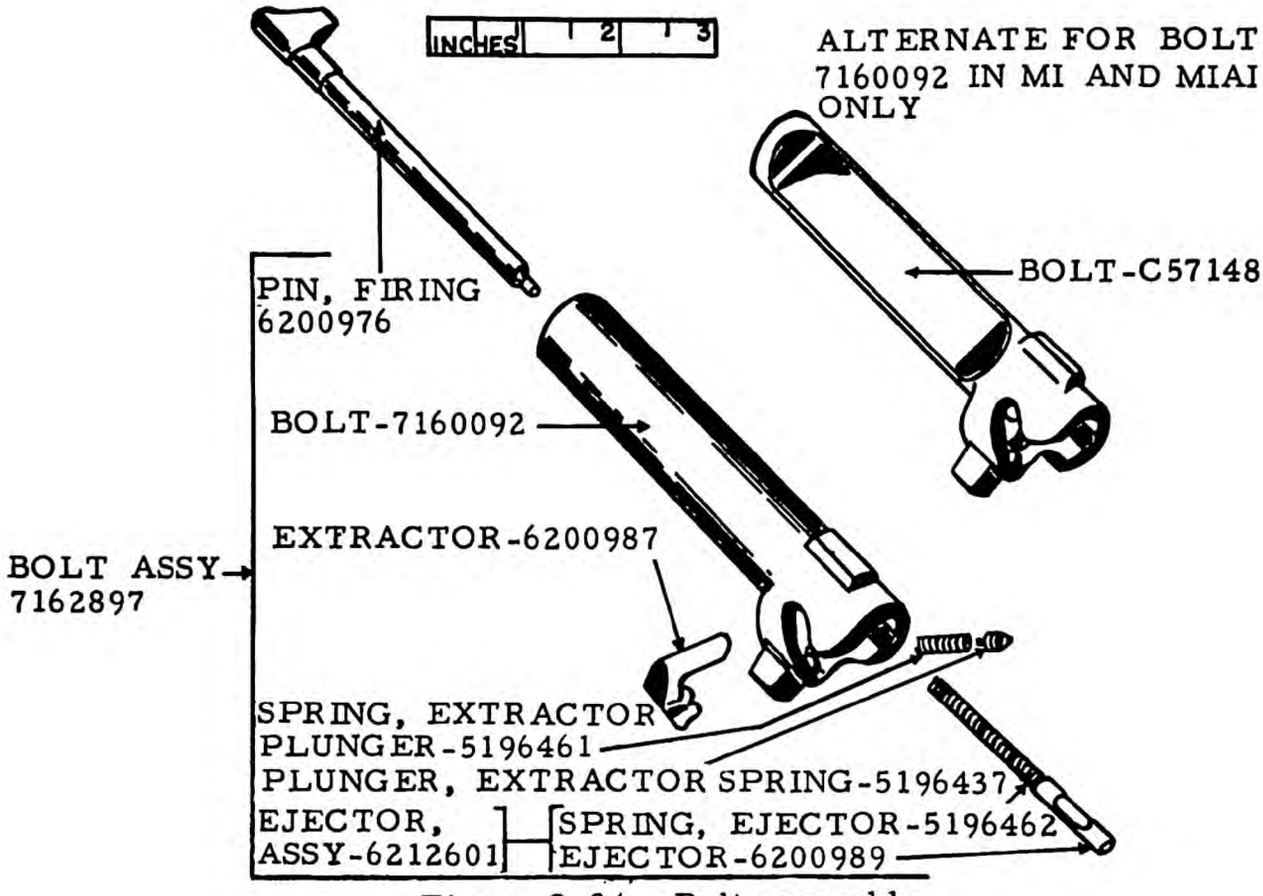

Figure 2-34. Bolt assembly.

ASSEMBLY OF THE BOLT

Insert ejector and ejector spring so that recess in ejector, when it is depressed, will line up with inside surface of the bolt to permit complete entry of the extractor.

Insert extractor spring and plunger. Position the plunger so that its flat surface will match the inner flat surface of the extractor retaining lip.

Place bolt disassembling tool on bolt (fig. 2-33) so that slotted tang of its pawl rests on extractor plunger. Turn thumb screw of tool until plunger is depressed; at the same time, the ejector is depressed into bolt by the tool.

Insert firing pin and extractor and remove tool.

DISASSEMBLY OF THE GAS PISTON

The gas piston and piston nut are the only removable parts of the gas cylinder group. To remove the piston, clamp the barrel firmly in a vise with protected jaws, and using gas piston nut removing tool M5 5621065, or gas cylinder reconditioning tool 7160995 (fig. 2-35) (with wrench component), unscrew the piston nut counterwise from gas cylinder (fig. 2-35).

Take care not to burr or twist prongs on nut when removing (nut is staked in place) or piston will not move freely. Remove nut, elevate muzzle of barrel, and slide piston out of gas cylinder. If necessary, tap cylinder lightly with a wooden block to slide piston out.

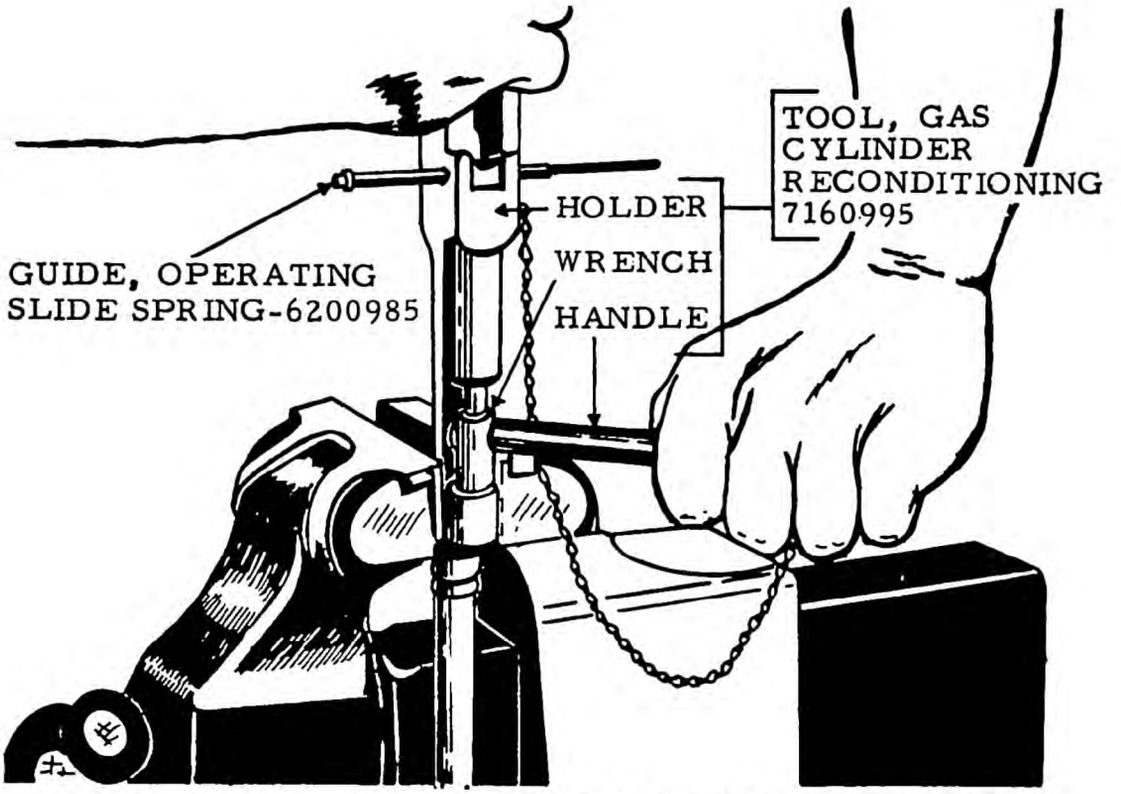

Figure 2-35. Removing piston nut from gas cylinder.

ASSEMBLY OF THE GAS CYLINDER GROUP

Insert piston into gas cylinder and screw piston nut into the threads using gas cylinder reconditioning tool 7160995 (with component wrench). Make certain to stake the cylinder lightly into the nut, in one of the three placed provided, or the nut may work loose during firing of the carbine. After the piston and nut are assembled in the gas cylinder, check to assure that there is no binding.

FUNCTIONING OF PARTS AND CYCLE OF OPERATION, U.S. CARBINE, CAL. .30, M2

When the weapon fires, all of the moving parts move so fast it is actually impossible to observe the functioning of parts because in the Cycle of Operation, Firing, Unlocking, Extraction, Ejection, Cocking, Feeding, Chambering, and Locking all take place within a fraction of a second (1/800).

To more fully understand the above information, we will break it down into two categories: (1) Functioning of Parts; (2) Cycle of Operation.

Within the two categories mentioned, the weapon delivers both Semiautomatic and Automatic fire. Each will be explained separately.

For explanation purposes, we will assume there is a round in the chamber and the weapon is ready to fire.

The functioning of the parts on the Carbine, M2, is comparatively simple considering that additional parts function when the selector is changed from Semiautomatic to Automatic Fire. To have a good working knowledge of the operation of the weapon, we must first understand the functions of the major groups.

1. MAGAZINE GROUP

   a. To house and feed ammunition up into the path of the bolt.
   b. Hold the ammunition in position for chambering.

2. TRIGGER-HOUSING GROUP

   a. Houses the firing mechanism
   b. Houses the safety mechanism
   c. Retains magazine

3. OPERATING SLIDE GROUP

   a. Operates the bolt
   b. Unlocks the breech end of the barrel
   c. Operates the firing mechanism during automatic fire

4. BOLT GROUP

   a. Extracts and ejects spent cases
   b. Houses the firing pin
   c. Cocks the hammer
   d. Serves as locking device

5. BARREL AND RECEIVER GROUP

   a. Houses gas cylinder and piston, causing unlocking of the breech
   b. Retracts the firing pin out of the face of the bolt
   c. Serves as a guide for the bolt
   d. Serves as a guide for the operating slide

6. STOCK GROUP

a. Serves as a means to grasp the weapon
b. For attachment of metal parts

OPERATION, Semiautomatic (Selector Positioned to the Rear)

FIRING. When the trigger is depressed, it pivots about the trigger pin causing the trigger lip to rise and carry with it the rear end of the sear. The sear also pivots about the trigger pin and now disengages from the sear notch in the hammer. The hammer is now driven forward by the compressed hammer spring striking the firing pin, thru which its blow is transmitted to the primer of the cartridge. The bolt, however, must be fully rotated to its locked position before this action can take place, because the tang of the firing pin is blocked by the bridge of the receiver except when the tang is aligned with the slot in the receiver bridge.

UNLOCKING. When the bullet passes the gas port, some of the gases pass through the port in the barrel into the cylinder where the gas strikes the piston. The piston is driven sharply to the rear about 3/16 inch where its motion is stopped by the gas piston nut.

The sharp blow of the piston strikes the operating slide, driving it to the rear. The rearward movement of the slide starts compressing the operating slide spring which furnishes power for forward (counter-recoil) movement of slide and bolt.

The initial movement of the operating slide to the rear, about 5/16 inch, is independent of the bolt to allow the expanding gas pressure to subside to a safe point. The camming recess in the operating slide then comes in contact with the cam lug on the bolt and cams it upward, rotating the bolt to the left (counterclockwise) and disengaging the locking lugs on the bolt from their recesses in the receiver and, at the same time, withdrawing the firing pin from the face of the bolt by the action of the firing pin tang, rotating in the camming recess on the receiver bridge.

EXTRACTING. As the operating slide continues to the rear, it carries with it the bolt, which withdraws the empty cartridge case from the chamber, gripped by the extractor.

EJECTING. When the mouth of the empty cartridge case clears the breech, the ejector which is continually pressing on the cartridge pivots the cartridge case around the extractor and ejects the empty case through the action of the compressed ejector spring.

COCKING. The rear end of the bolt forces the hammer back and overrides it, thus compressing the hammer spring. The sear notch in the hammer is engaged by the nose of the sear during the forward movement of the bolt.

FEEDING. With the bolt at its extreme rearward position, the magazine is uncovered. The magazine follower, actuated by the magazine spring, forces the cartridge upward in the magazine so the top of the cartridge lies in the path of the bolt.

CHAMBERING. As the bolt moves forward, actuated by the compressed operating slide spring, the lower face of the bolt comes in contact with the base of the cartridge and slides it forward into the chamber.

LOCKING. When the bolt reaches its forward position, the rim of the cartridge is engaged by the extractor and the ejector spring compresses the ejector against the back of the cartridge case. The cam lug on the bolt is cammed downward by the cammed recess in the operating slide which rotates the bolt clockwise to engage the locking lugs in the receiver. This action locks the bolt, and the operating slide then continues to move forward for about 5/16 inch. Now the trigger is released and the weapon is ready to fire again.

OPERATION, Full Automatic (Selector Forward)

To change from semiautomatic to full automatic fire, the selector must be moved to the forward position. This in turn raises the pivot point of the disconnector lever, bringing it into the path of the camming surface on the inertia block of the operating slide.

When the first round is fired, the mechanical functioning is the same as in semiautomatic fire. However, on the second round additional parts function which makes the M2 an automatic weapon. On the last action of counter-recoil, the camming surface on the operating slide contacts the nose of the disconnector lever forcing it down. This action causes the rear end of the disconnector to move up.

Since the rear end of the disconnector lever is in contact with the disconnector, the front part of the disconnector will also be caused to move up, pivoting on the hammer pin. This action causes the projection on the disconnector to bear upon the raised shoulder on the sear, disengaging the sear from the sear notch in the hammer.

The hammer will be driven forward by the hammer spring, priming the cartridge and starting recoil action in the weapon. The disconnector spring, which was compressed by the upward movement of the disconnector,

will decompress as recoil begins and reposition the disconnector to the inoperative position until the camming surface on the operating slide contacts the nose of the disconnector lever again on counter-recoil to cause the weapon to fire automatically.

When the trigger is released, this allows the sear to move rearward under the compression of the sear spring, clearing the raised shoulder of the sear from the lateral projection on the disconnector. This action prevents the disconnector from releasing the sear from the cocked hammer; therefore the weapon stops firing.

MALFUNCTIONS, STOPPAGES, AND IMMEDIATE ACTION

MALFUNCTION. A malfunction is the failure of a weapon to fire for any reason.

STOPPAGE. The failure of a weapon to fire through no fault or intention of the shooter.

IMMEDIATE ACTION. The unhesitating application of a probable remedy to clear a stoppage without investigating the cause of the stoppage.

STUDY TABLE I, Stoppages and malfunctions.

Table I. Stoppages and Malfunctions.

Malfunction	Cause	Correction by soldier
Failure to chamber --	(1) Dirty or rough chamber ---------	(1) Clean chamber.
	(2) Restricted gas port	(2) Clean gas port.
	(3) Dirty or improperly lubricated carbine.	(3) Clean and lubricate carbine.
	(4) Damaged magazine	(4) Replace magazine.
	(5) Ruptured cartridge case in chamber.	(5) Remove ruptured cartridge case.
Failure to fire (hammer releases but carbine does not fire).	(1) Bolt not seated and locked ----------	(1) Pull operating slide halfway to the rear and release it. Insure complete locking.
	(2) Defective or broken firing pin.	(2) Replace bolt.
	(3) Defective ammunition ----------	(3) If practicable, secure new ammunition.
Failure to extract----	(1) Dirty or rough chamber ---------	(1) Clean chamber.
	(2) Restricted gas port	(2) Clean gas port.
	(3) Dirty ammunition -	(3) Clean cartridge or, if practicable, secure new ammunition.
	(4) Broken extractor -	(4) Replace bolt.
Fires in bursts of two or three rounds (rare).	(1) Sear broken or worn, or remains in open position.	(1) Replace sear.
Pressure on trigger does not release hammer.	(1) Deformed hammer or trigger -------	(1) Replace defective part.
	(2) Broken trigger spring	(2) Replace trigger spring.
Selector cannot be moved from automatic to semiautomatic setting.	(1) Selector spring incorrectly assembled in trigger housing group.	(1) Place selector spring in proper position, loop toward trigger guard.
Disconnector fails to function.	(1) Projecting lug on rear of disconnector is broken.	(1) Replace disconnector.
Selector shifts to semiautomatic when firing automatic fire.	(1) Broken or weak selector spring.	(1) Replace selector spring.

CARE AND CLEANING

Experience has proven that more weapons become unserviceable through lack of proper maintenance than for any other reason. Maintenance includes all measures taken to keep the weapon in peak operative condition.

The care and cleaning of a weapon is one of the measures taken to insure proper operation.

The metal parts of the weapon are cleaned and lubricated to prevent rust, corrosion, accumulation of dirt, grit, carbon, powder-residue, and leading. The wooden parts are lubricated to prevent splitting and cracking.

Listed below are the suggested times and items used in normal cleaning of the carbine.

EQUIPMENT

a. M-3 or M-10 cleaning rod
b. Patch tip (for cleaning rod)
c. Bristle bore-brush
d. Waste material (rags)
e. Bristle brush (toothbrush, typewriter brush, etc.)

CLEANERS (For Metal)

a. Bore cleaner (use in bore only)
b. Solvent
c. Commercial solvents (such as Hoppe's #9)
d. Hot soapy water

LUBRICANTS

a. Metal Parts

(1) Medium preservative oil (general purpose, use when average temperature is above +32° F.)
(2) Special preservative oil (use when average temperature is below 32° F.)
(3) Rifle grease (use on points of excessive wear)

b. Wooden Parts

(1) Raw linseed oil

TIMES TO CLEAN

a. Before Firing

(1) Clean bore of preservative oil or obstructions.
(2) All metal parts should have a thin film of oil.
(3) All points of excessive wear should be coated with rifle grease. (Fig. 2-36.)

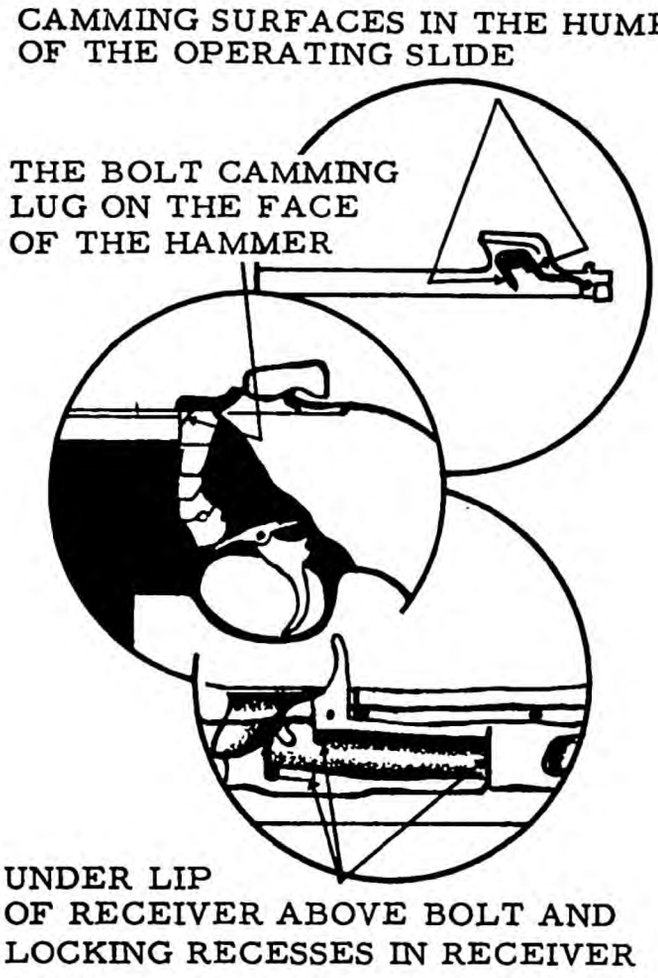

Figure 2-36. Points on which to apply rifle grease.

b. During Firing

(1) Clean any portion of the weapon that causes a malfunction because of grit, carbon, improper cleaning, etc.

c. After Firing

(1) Clean weapon the same day it has been fired.

(2) Clean weapon for three (3) consecutive days after firing. (This is done because metal is actually porus and powder-residue is forced into these pores under the high pressures created. As the metal cools, contracts, and sweats, the power-residue is forced out of the pores. This residue will become corrosive if not cleaned off. Within the three-day cleaning period, all residue will be removed.)

d. Storage of Weapons

(1) Coat metal portion of weapon with medium grade preservative oil and check every four (4) or five (5) days for rust and corrosion.

INSPECTION AND IDENTIFICATION OF DEFECTIVE WEAPONS

TO 11W-1-10 requires that carbines have a special inspection every 500 rds. or 6 mos., whichever occurs first. It also requires that AFTO Form 105 be maintained with an entry of rds. fired each day and total rds. fired through the weapon. It will also have an entry of special inspections.

The special inspections are one of the four listed below:

1. Magnaglo
2. Magnaflux
3. Black-light
4. Visual

For further information pertaining to special inspections refer to TO 11W-1-10.

The following check list should be used as a guide to check the carbine for cracks, excessive wear, burrs, and corrosion.

BARREL AND RECEIVER GROUP (Fig. 2-37.)

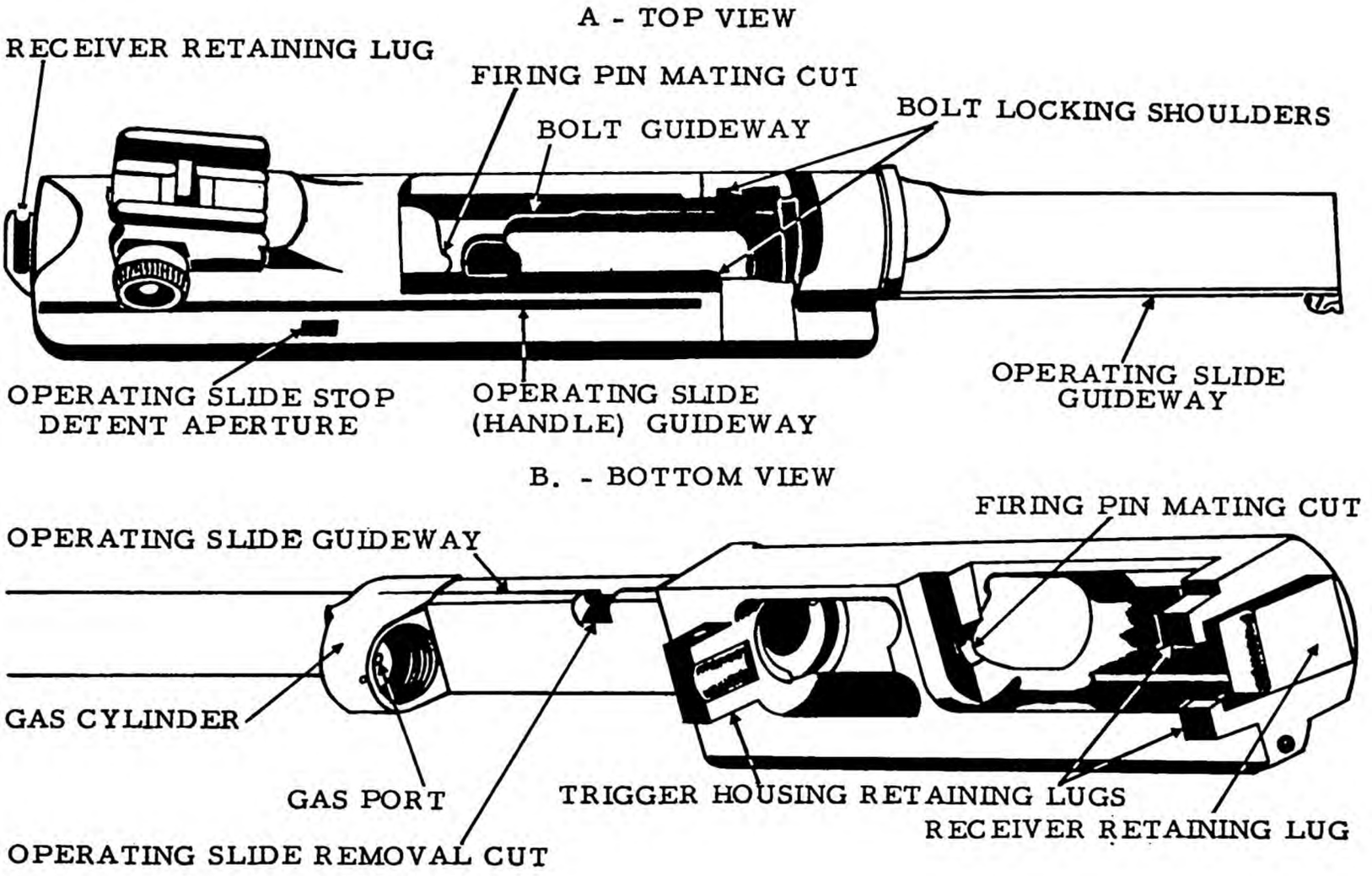

Figure 2-37. Barrel and receiver group-points of inspection.

TRIGGER HOUSING GROUP (Fig. 2-38.)

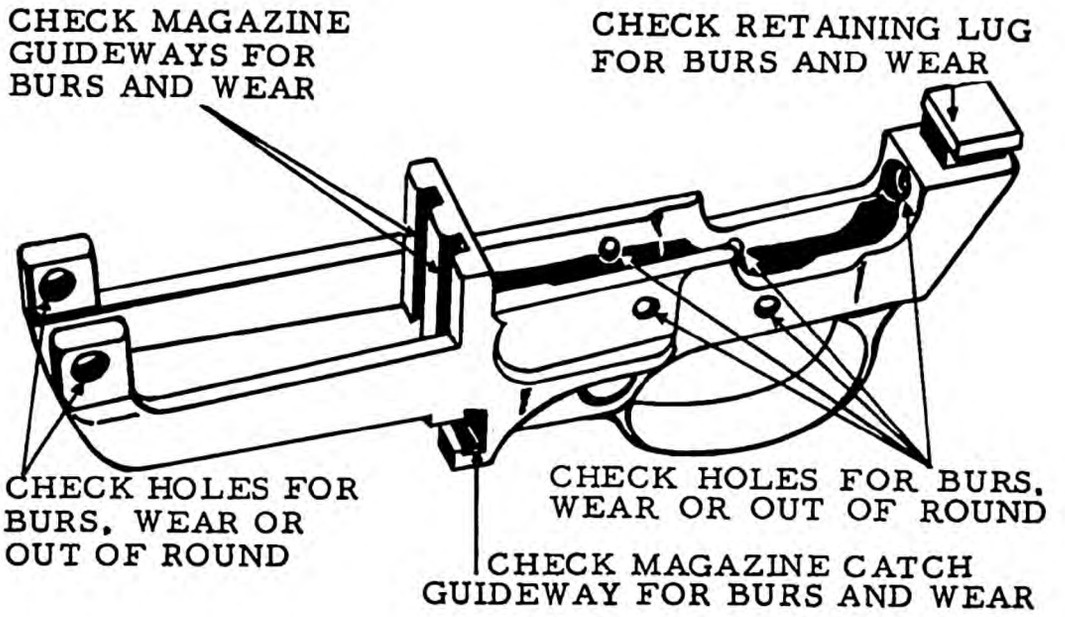

Figure 2-38. Trigger housing inspection points.

BOLT

1. Locking lugs
2. Hammer cam
3. Firing pin tang slot
4. Firing pinhole at face of bolt
5. Cams on operating lug
6. Firing pin
7. Ejector, extractor, springs, and plungers

SLIDE

1. Guide lugs
2. Bolt camming recess
3. Spring guide seat
4. Inertia block and rear bar
5. Operating slide stop

GAS CYLINDER

1. Gas cylinder
2. Gas port (.70 in.)
3. Piston
4. Piston nut

HEADSPACE

Headspace of a carbine is the distance between the shoulder of the chamber and the face of the bolt when the bolt is in locked position.

For correct headspacing refer to figure 2-39.

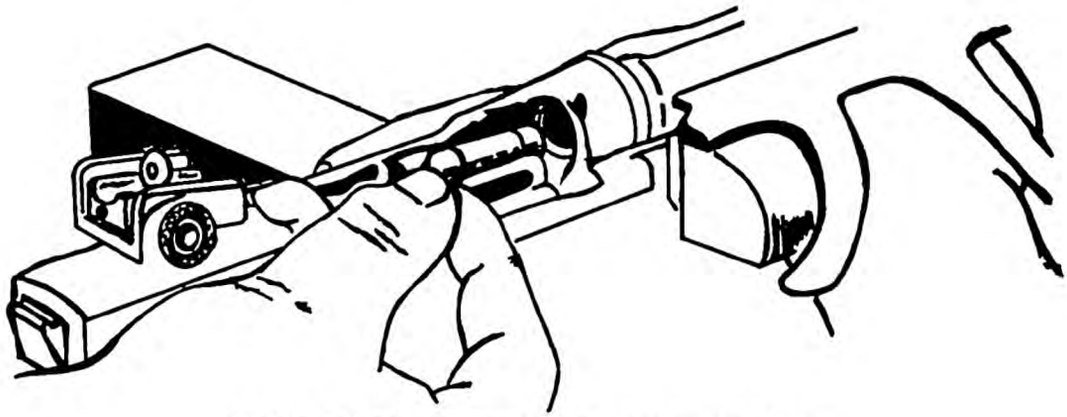

RIM STYLE HEADSPACE GAGE
PLACED IN FACE OF BOLT



BOLT NOT CLOSING ON 1.302 GAGE

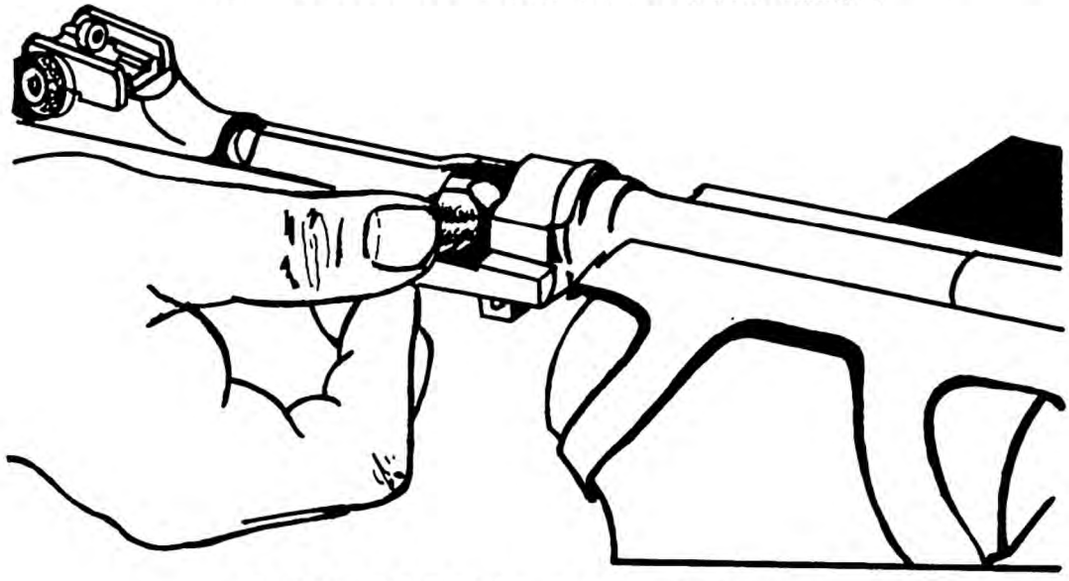

BOLT CLOSING ON 1.290 GAGE

Figure 2-39. Checking headspace.

FIRING PIN PROTRUSION

Firing pin protrusion is the distance the firing pin protrudes through the face of the bolt when the firing pin is in the forward position. Protrusion of the firing pin should be not less than .048 in. and not more than .065 in.

For detailed information pertaining to inspection and identification of defective weapons refer to TO 11W3-2-2-3.

SPECIAL TOOLS AND GAUGES

The following are the special tools most often needed in the normal maintenance on the carbine. (Figs. 2-40 & 2-41.)

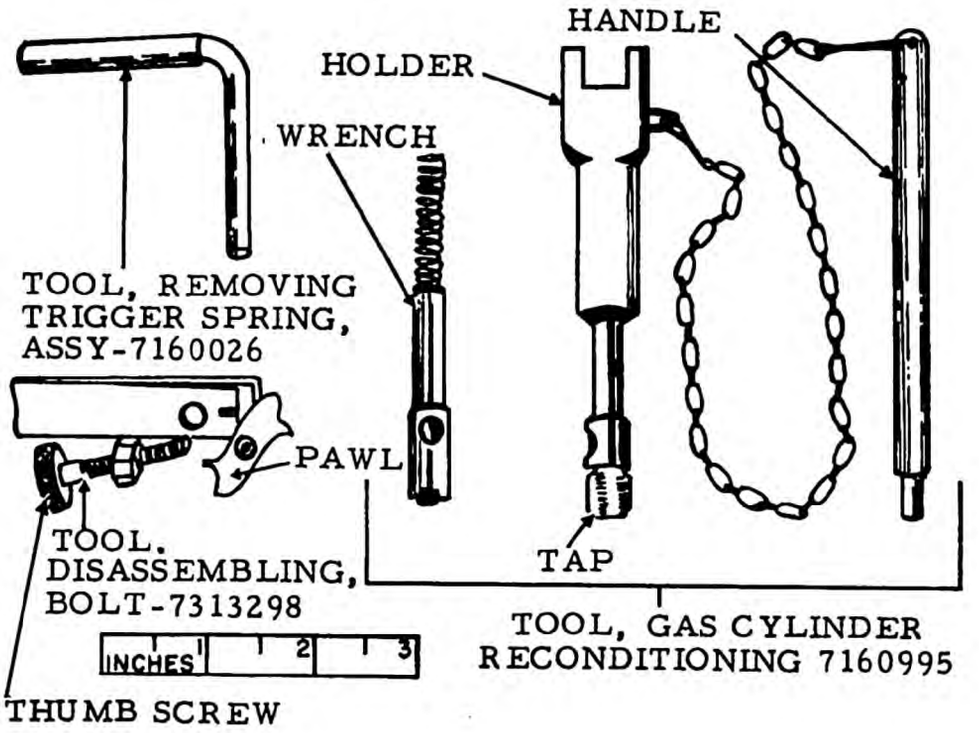

Figure 2-40. Special tools.

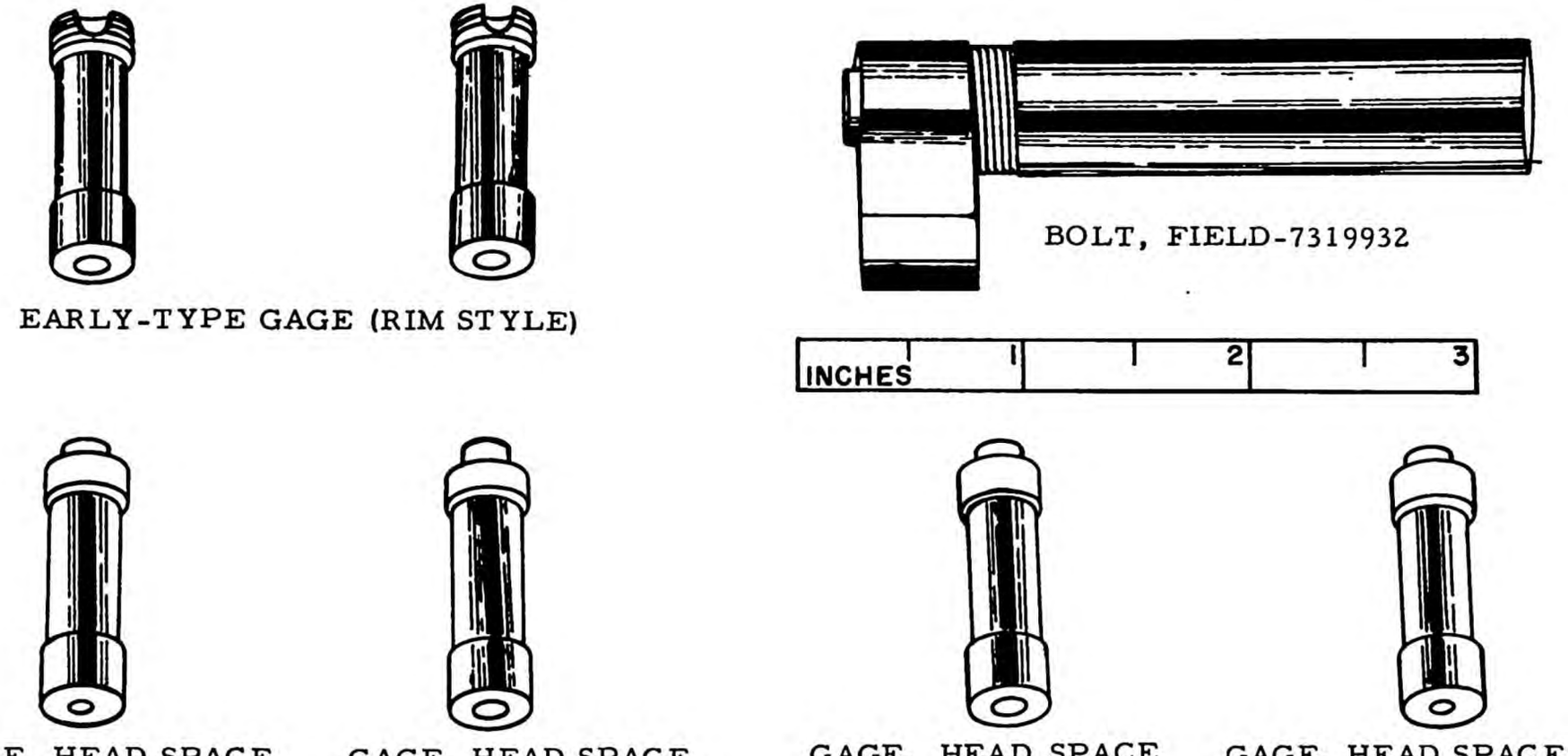

Figure 2-41. Special tools.

QUESTIONS

1. What is the capacity of the M2 magazine?
2. What are the major groups and assemblies of this weapon?
3. What is the difference between field and detail stripping.
4. What is the first step in disassembling the carbine?
5. What is the purpose of knowing the disassembly and assembly of the carbine?
6. How many pounds of chamber pressure does the carbine have on firing?
7. What are the three functions of the trigger-housing group?
8. What is responsible for unlocking the breech?
9. What would cause the carbine to fire in bursts of two or three?
10. During automatic firing, what is responsible for tripping the sear?
11. What restricts the forward movement of the firing pin when the bolt is not fully locked?
12. Why does the carbine quit firing full automatic when the trigger is released?
13. What parts do not function when the selector is placed on semiautomatic fire?
14. What repositions the gas piston?
15. Why is it necessary to clean the weapon for three (3) consecutive days after firing?
16. What TO controls the special inspection of the carbine?
17. What form is used to keep a continuous record of rounds fired and special inspections accomplished?
18. What is meant by headspace?
19. What is meant by firing pin protrusion?
20. What places on the carbine should receive a coating of rifle grease?

UNIT 7A

MECHANICAL TRAINING, CALIBER .22, RIFLE

OBJECTIVE

To understand the nomenclature and field stripping of caliber .22 target rifles and become familiar with the use and adjustments of the micrometer sights used on these weapons.

INTRODUCTION

Information contained herein will be most valuable to the marksmanship instructors in promoting shooting programs which will include fielding small-bore rifle teams at base and squadron level, as well as junior marksmanship teams.

NOMENCLATURE, DISASSEMBLY, AND ASSEMBLY

There are two models of caliber .22 target rifles which will most likely be used in the Air Force Marksmanship program. They are the Model 40X, Remington Caliber .22 target rifle; and the Model 52, Winchester, Caliber .22 target rifle. These rifles are similar in quality, price, weight, and accuracy. The general specifications of these weapons are as follows.

Caliber .22 Rifle M12, Remington, M40X-S1

Weight	10 lbs, 12 oz.
Overall length	46 3/4 inches
Barrel length	28 inches
Number of lands & grooves	6
Twist of rifling	Right hand, one turn in 16 inches
Type of loading	Single shot, hand loaded
Ammunition	Cartridge, Cal. .22, long rifle
Approx. maximum range for cartridge	1,500 yards
Normal chamber pressure	20,000 pounds per square inch
Muzzle velocity	1,100 feet per second

Caliber .22 Rifle M12, Winchester, Model 52, Heavy Barrel (fig. 1A-1)

Weight	11 lbs, 10 oz.
Caliber of bore	0.22 inches
Barrel length	27.5 inches
Overall length	45.8 inches
Rifling length	26.75 inches
Number of lands & grooves	6
Twist of rifling	Right hand, one turn in 16 inches
Type of loading	Magazine
Magazine capacity	5 cartridges
Sight radius	33.8 inches
Ammunition	Cartridge, Cal. .22, long rifle
Approx. maximum range of cartridge	1,500 yards
Normal chamber pressure	20,000 pounds per square inch
Muzzle velocity	1,100 feet per second

The target rifle is accurized at the factory with the barrel and receiver carefully bedded in the stock and adjusted to give the rifle its ultimate in accuracy. Any time the barrel and receiver are separated from the stock or any time the bedding screws are tampered with, the accuracy of the rifle is compromised. For this reason, disassembly of the target rifle should not go beyond the removal of the bolt. Bedding screws should not be tampered with.

On the Remington, Model 40X rifle, an adjustment screw, located just forward of the trigger, may be manipulated with a small screw driver to lighten or increase the weight of the trigger pull. Caution should be exercised, so as not to turn the screw too far counterclockwise as this will cause a malfunction in the trigger mechanism.

To remove the bolt from the Remington Model 40X rifle, press in the bolt release, located inside the trigger guard just forward of the trigger, and pull the bolt to the rear. To replace the bolt, slide the bolt forward in the receiver until it locks into position.

To remove the bolt from the Winchester Model 52, the trigger is pulled to the rear and the bolt is removed from the rear of the receiver. To replace the bolt, simply depress the trigger and push the breech bolt assembly forward. Release the trigger and move the safety to the SAFE position; slide the breech bolt to its foremost position; and lower the breech bolt handle to the locked position.

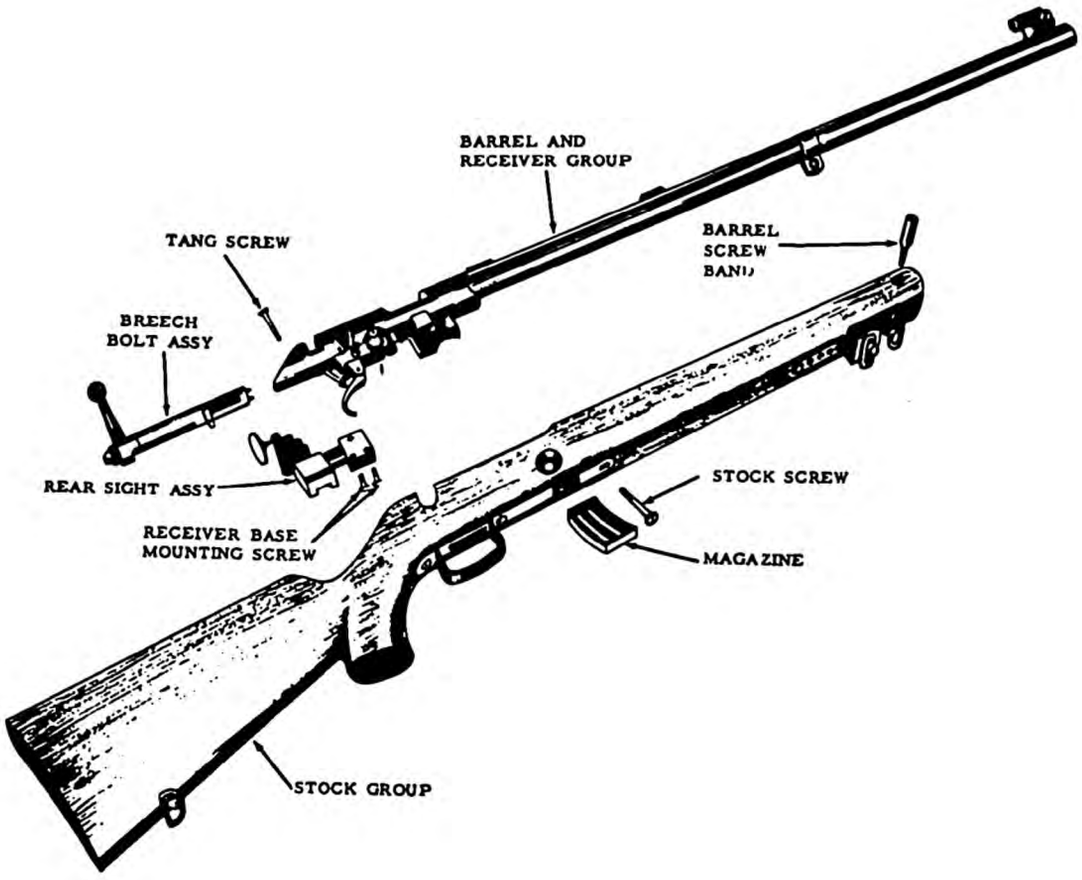

Figure 1A-1. Caliber .22 Rifle (Winchester M52 heavy barrel).

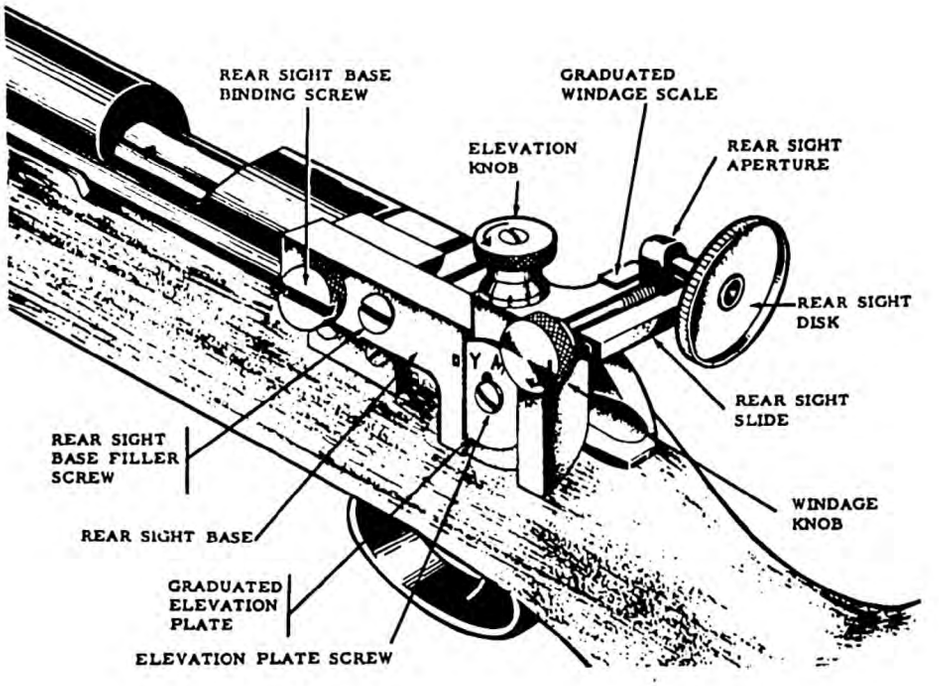

Figure 1A-2. Caliber .22 M12 receiver extension rear sight assembly.

MICROMETER SIGHT ADJUSTMENTS ON CAL .22 TARGET RIFLE

The receiver sight is an aperture-type sight designed to give the target shooter very fine adjustments which are necessary for precision shooting. The sight is designed to adjust for both windage and elevation corrections and is calibrated to move the strike of the bullet 1/4 of an inch at 100 yards for each click of either the windage or elevation knob. One complete turn would move the strike of the bullet three inches at 100 yards or three minutes of angle.

It should be brought out at this time that when we say we are moving the strike of the bullet in any direction, in actuality, we are moving the sight not the bullet. By moving the sight, we cause the strike of the bullet to move in the same direction that the sight is moved.

To move the strike of the bullet up, the elevation knob is turned or rotated in a counterclockwise direction. To lower the strike of the bullet, the elevation knob is rotated in a clockwise direction.

To move the strike of the bullet to the right, the windage knob is turned in a clockwise direction. To move the strike of the bullet to the left, the windage knob is moved in a counterclockwise direction. These adjustments are clearly marked on the adjustment knobs with arrows.

When the shooter is satisfied that the weapon is zeroed at any given range, he may then loosen the set screws on the pointer index and adjust the pointer index to any mark desired on the calibrated scale. After that, this setting may be used as a reference point. To move from the fifty-yard range to the one-hundred-yard range, the elevation knob must be turned counterclockwise (up) approximately twenty-six clicks.

To move the strike of the bullet from one scoring ring to another at either the fifty-yard range or the one-hundred-yard range, the adjustment knob must be moved four clicks.

QUESTIONS

1. What is the proper method of removing the bolt from the Remington Model 40X target rifle?

2. To move the strike of the bullet horizontally from one scoring ring to another, how many clicks must the windage knob be turned?

3. TRUE OR FALSE -- The pointer index on the micrometer sight is used to indicate where the bullet strikes the target.

4. TRUE OR FALSE -- The elevation knob must be turned approximately 27 clicks counterclockwise when moving targets from fifty yards to one hundred yards.

5. Of the two target rifles described in this study guide, which weapon is magazine fed and what is the capacity of the magazine?

6. On the Remington Model 40X target rifle, an adjustment screw is located just forward of the trigger. What is the function of this adjustment screw?

7. One complete turn of either windage or elevation knob will move the strike of the bullet _____ inches at 100 yards.

UNIT 7B

TELESCOPIC SIGHTS, SPOTTING SCOPES AND HIGH-POWER SCORE BOOK

OBJECTIVE

To understand the advantages, use, care, and adjustment of telescopic sights and spotting scopes. Also to understand the use and importance of the high-power score book.

INTRODUCTION

The advantages of telescopic sights are a clearer picture, focal plane aiming, and precision aiming. A shooter has only to sight on the target and there in the same focus, appearing at the same distance, is the reticle, sharp and clear, indicating the exact point at which the bullet will strike the target. By the same token, the proper use of the high-power score book is an additional aid as it keeps an accurate account of your shooting ability and a permanent record of your progress.

TELESCOPIC SIGHTS

The first adjustment to make is to focus the ocular lens. (See fig. 1B-1.) Do this by pointing the telescope toward the sky, then turn the eye-lens until the cross hairs appear clear and black. Be sure after a few minutes of trial that the cross hairs continue to remain black and that your eye is not accommodating itself to an incorrect focus. When this adjustment has been made and locked with the locking nut, it should not be changed unless the eye focus changes. The diagram (fig. 1B-1) on the next page will help you understand the basic parts of the optical system within the telescopic sight.

After focusing the ocular lens, we must now mount the scope on the rifle. To do this, we align the mounts on the block and align the mounting screw with the V-shaped notch and tighten the mounting screw with a coin no larger than a dime.

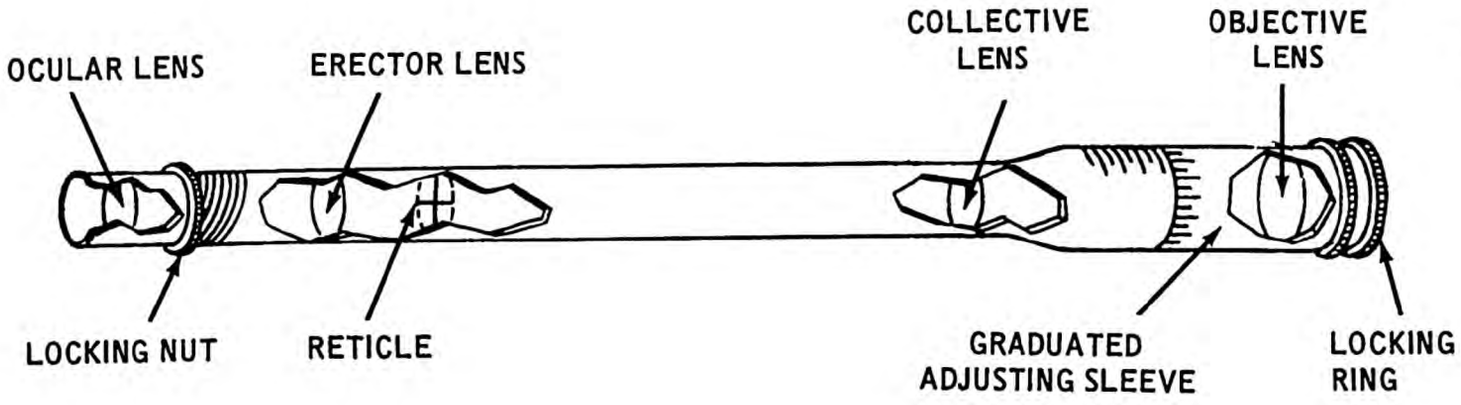

Figure 1B–1. Telescopic sights.

NOMENCLATURE FOR TELESCOPIC SIGHTS

1. The objective lens at the front of the telescope forms the primary image of the objects reviewed.
2. The reticle or cross hairs is a sighting point which indicates the point of aim.
3. The erector lens re-inverts the image so that it can be seen right-side up and in correct left-to-right position.
4. The ocular lens is the lens from which the image enters the eye.
5. The graduated adjusting sleeve permits focusing the telescope at various distances and is used to remove parallax.
6. The locking ring is used to lock the graduated adjusting sleeve in place.
7. The locking nut is used to lock the ocular lens at the correct distance from the reticle to assure that the cross hairs have definition.

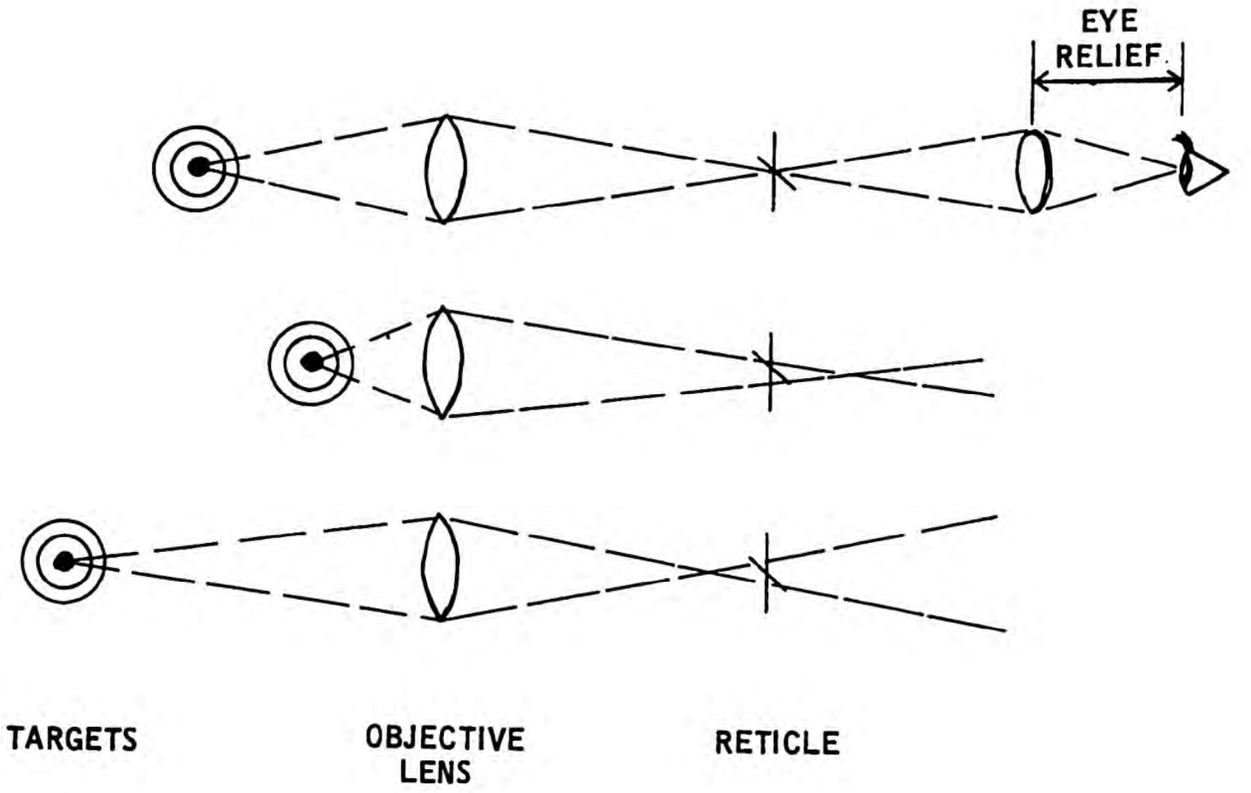

Figure 1B-2. Parallax and eye relief.

The next step is to focus the objective lens on the target by turning the adjusting sleeve at the front of the scope--turning the sleeve to the range desired. This is indicated by graduations on the rear of the sleeve. Normally, this will give proper focus for this range. If it doesn't, then focus clearer by turning the sleeve one way or the other until image of target clears. Never try to adjust a scope by looking through it continuously as the human eye will accommodate itself to a poor focus. Re-focus each time you change ranges. For distances over 200 yards, you need not make any adjustments; just set sleeve at 200 yards and target will appear clearly focused. If focusing of the objective lens is not correct, parallax will result. Parallax is the apparent displacement of an object against its background. In telescopes, it is the apparent movement of the reticle (cross hairs) on the target when you move your eye in any direction off the mean axis of the telescope. It is caused by the objective lens not forming an image of the target on the reticle. Example: When the objective lens is focused at a greater range than the target, the image will form forward of the reticle; and, if the objective lens is focused at a lesser range than the target, the image will be formed behind the reticle. Both conditions will cause parallax. To correct the parallax, it must first be ascertained if the focus is short of the target or focused past it. To find out which, look through the eyepiece at your target and move your eye

left or right of center. If the reticle seems to move in the same direction as the eye, then the objective lens is focused at some point beyond the target. If the apparent movement of the reticle is in the opposite direction of the movement of your eye, then the objective lens is focused at some point short of the target. Correct these conditions by focusing the objective lens in the required direction until the parallax is removed. NOTE: When a telescopic sight is focused with the objective lens focused at the same range as the target, then no parallax exists. Another factor in telescopic sights is "eye relief." Eye relief is the distance between the eyepiece and the eye. It is the greatest distance the eye can be held away from the sight and still get a complete filling of the ocular lens by the image. The diagram in figure 1B-2 will help explain parallax and eye relief.

SPOTTING SCOPE

Next, we will consider the spotting scope. A good spotting scope is a necessary article of equipment for the target shooter. Over the years, the spotting scope has undergone a process of evaluation and standardization of design. Today, most designs represent what experience has shown the shooter needs. There are two basic types: the draw-tube type which the shooter focuses by drawing the tube to the rear and forward until focused, and the prism type which he focuses the lens within the scope by turning a focusing device. The prism type is more widely used because of the advantages it has over the draw-tube type. Some of these have a larger field of view, better image definition, and light gathering power. The spotting scopes are provided with mounts. These are either bipod or tripod with built-in adjustments for elevation and traversing.

Scopes need very little attention in most cases. Most of the better scopes are sealed so that moisture and dirt cannot enter. The outside of the scope will need occasional cleaning and a thin coat of oil to prevent rust. The lenses should only be cleaned when required and then only with extreme care so as not to damage the polished coated surfaces. If dust or dirt gets on the lens, dust it with a soft camel's-hair brush; if the lens get smeared, use a liquid mild cleaner. To transport scopes, always use the case provided and use some kind of packing to prevent movement of the scope inside the case; store in a cool dry place when not in use to prevent fungus growth inside scopes.

THE HIGH-POWER SCORE BOOK

A score book is used to keep a record of the following information: zero of a certain rifle at different ranges, weather conditions affecting firing on particular days, sight picture used to fire the different stages of a match, lot number of ammunition used at different matches, a permanent record of your groups, a permanent record of the ranges fired on, dates matches are fired, time match takes place, scores fired in match, and velocity and direction of wind at the time match stages are fired. This information is useful to the shooter. If the match rules do not permit sighting shots, this is where the score book becomes the shooter's best aid. If you have kept your score book properly, you can turn to a page in the book on which is recorded the sighting, windage, etc., that you used on a similar day weather-wise.

The pages of the score book are made up in different colors to aid the shooter in locating information in the proper sequence.

Yellow page is for 200-yard, slow-fire data.

Blue page is for 200- and 300-yard sustained RAPID fire use.

Pink page is for 600-yard.

Green page is for 1000-yard.

The numbered blocks on Sample Score Sheet (yellow), figure 1B-3 refers to items listed below:

Block 1---Place match is fired.

Block 2---Date.

Block 3---Time the stage begins.

Block 4---Temperature.

Block 5---Wind condition for that stage (strong, calm, etc.).

Block 6---Serial number of the rifle used during this match.

Block 7---Ammunition lot number used.

Block 8---Direction light is coming from.

Block 9---Sight picture used during the match (draw in front blade in target diagram).

Block 10--Wind direction and velocity; use arrow to show direction; print in speed.

Block 11--Remarks; any unusual happenings which might affect score.

Blocks 12, 13, 19 and 21 – Enter elevation and windage used to start the match.
Blocks 12 and 13 – Enter any changes made while firing.
Blocks 20 and 22 – After firing, enter correct elevation and windage.

Block 14--Call shot after firing; place dot to show strike; number to show value.

Block 15--Place value of preceding shot; at this time, plot shot on plotting bull.

Block 16--Target number.

Block 17--Light; print bright, hazy, dull, etc.

Block 18--Mirage: draw wavy line to show manner mirage is moving; print flat, boiling slowly.

Block 19--Elevation used to start match in minutes.

Block 20--Elevation corrected in minutes.

Block 21--Final score for that stage.

EXAMPLE 200 YARDS SLOW FIRE SCORE SHEET. 'A' TARGET

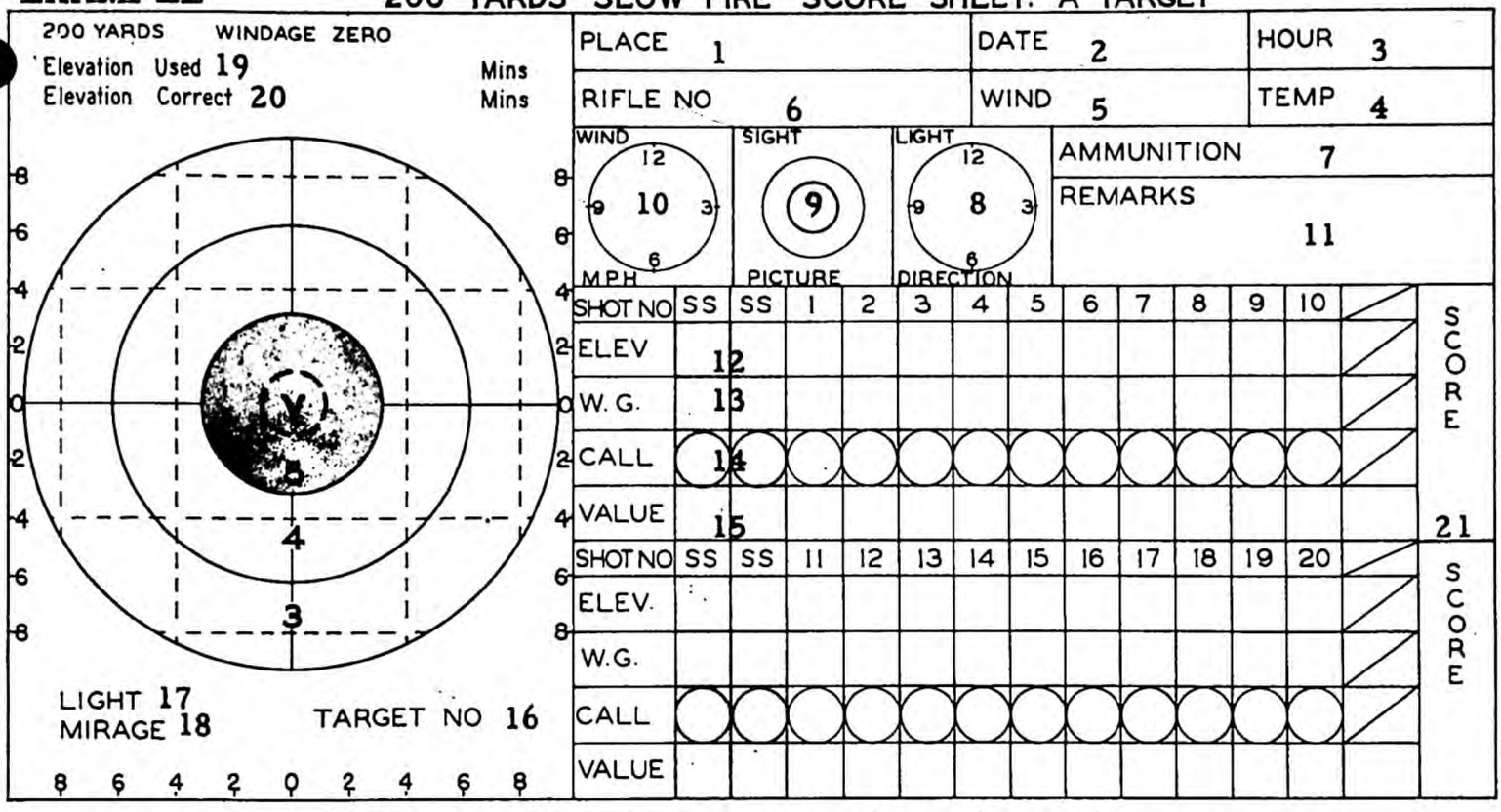

Figure 1B-3, Sample Score Sheet (yellow).

200 AND 300 YARDS R.F. SCORE SHEET. 'A' TARGET

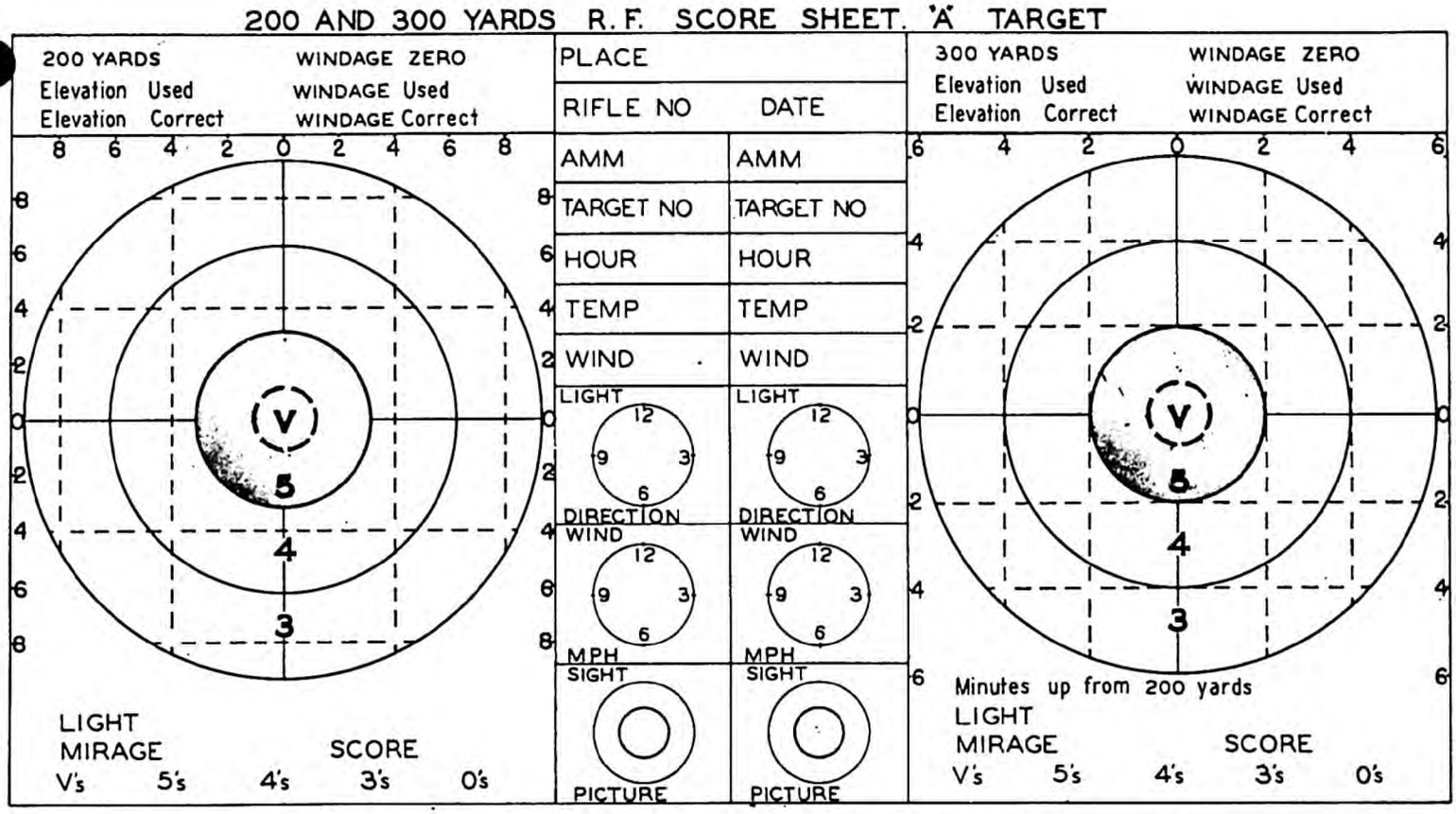

Figure 1B-3. Sample Score Sheet (blue).

To keep score book during sustained fire, make out all blocks on the blue sheet prior to firing the same as with the slow-fire sheet, the difference being in the manner you keep score of shots. After firing, you receive the score for all ten shots disked at one time. Record score in the following manner: 3-V's....2-5's....5-4's....0-0's. Add and place totals, including "V's."

The left of the sheet is used at 200-yard sustained fire. The right of the sheet is used at 300-yard sustained fire stages. Use plotting bull to show exact location of shot groups. Use diagrams included with this Student Study Guide.

QUESTIONS

1. What is parallax?

2. How is parallax in target scopes removed?

3. What is eye relief?

4. How often should scope lenses be cleaned?

5. What information is entered in "Remarks" block?

6. Yellow sheets are used for which stage of National Match Course?

7. Are there blocks for "Calls" on the sustained fire score sheet?

8. If no sighting shots are allowed in a match, how would previous entries in score book be used? What would you look for?

BIBLIOGRAPHY AND REFERENCES

Facts About Telescopic Sights, Bausch and Lomb Optical Co.

Sloan, E. F., Colonel, USA (Ret), Champion Score Book.

UNIT 9

MECHANICAL TRAINING, RIFLE, M16, CALIBER 5.56mm

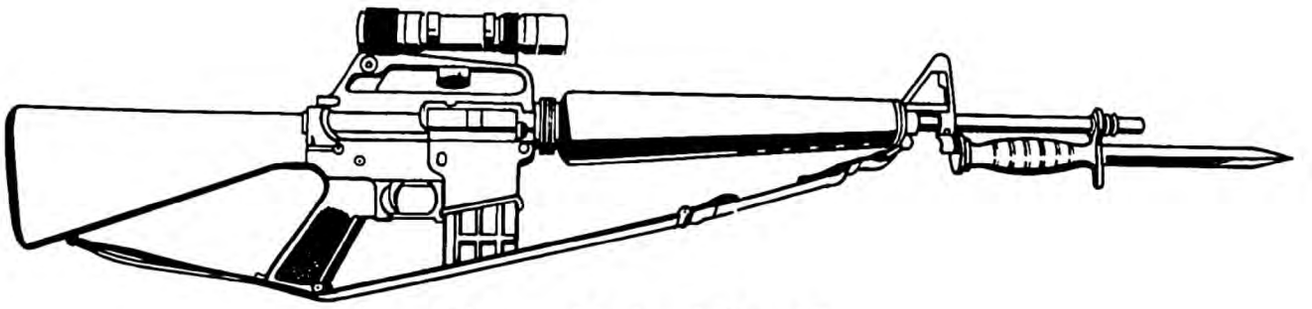

Figure 11-1. M16 rifle.

OBJECTIVE

To become familiar with the nomenclature and understand the disassembly, assembly, functioning, and malfunctions of the M16, caliber 5.56mm.

INTRODUCTION

The M16 rifle was developed by the Armalite Division of Fairchild Aircraft Corporation. It was developed as a short-range combat weapon (300 yards and less), but capable of longer ranges--to 500 yards.

The M16 has many advantages over the US Carbine—penetration, muzzle energy, and hydrostatic shock. The general specifications of the M16 rifle are as follows:

Weight	6.31 lb
Overall length	39 in (without bayonet)
Magazine capacity	20 rnd
Chamber pressure	52,000 lb avg
Barrel length	20 in
Sight radius	19.9 in
Maximum range	2,833 yd
Effective range	500 yd
Maximum rate of fire:	
Semiautomatic	45/65 rpm
Automatic (using 20-round magazines)	150/200 rpm
Muzzle velocity	3,250 fps
Cyclic rate of fire	700/800 rpm
Caliber	5.56mm (.223)
Bullet weight	55 grains, ball

GENERAL DESCRIPTION

The M16 rifle is a gas-operated, magazine-fed, semiautomatic (with selector, for full automatic), air-cooled, shoulder weapon.

The weapon has the accuracy of a sniper rifle and the firepower of a machine gun. It has a straight-line stock designed so that the recoil pushes straight into the shooter which tends to keep the rifle muzzle from rising while firing full automatic.

The gas-operating system is unique in that the heart of the system is in the bolt carrier. There is no operating rod, piston, or springs. (See fig. 11-2.)

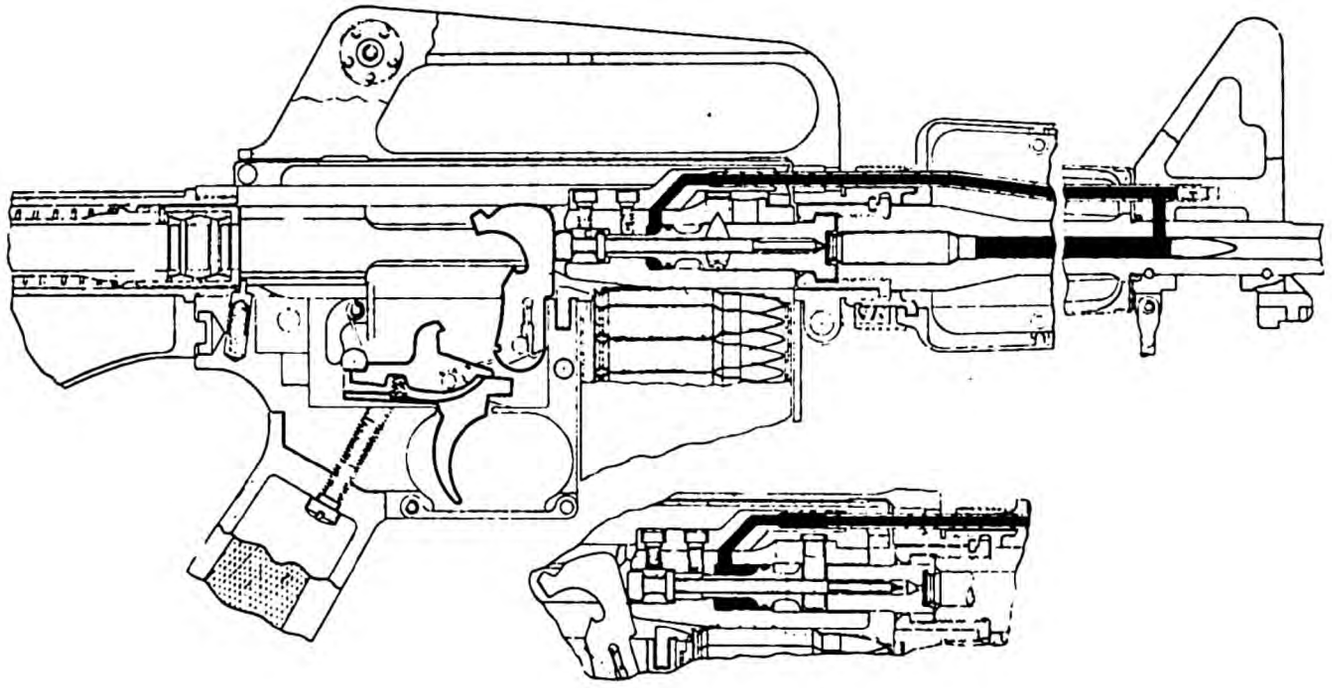

Figure 11-2. Gas-operating system.

The weapon is constructed of lightweight aluminum alloys and fiberglas. The metal is lubricated at the factory and requires little or no lubricant in the field. The weapon employs a winter trigger guard, flash suppressor—grenade launcher, and comes equipped with detachable bipod and telescopic sight.

DISASSEMBLY (Field-Strip only)

The M16 rifle is field-stripped by removing the magazine, visually inspecting the chamber, and then removing,the bolt carrier group from the upper receiver group, as shown in figure 11-3. The bolt carrier group is disassembled to complete field-strip.

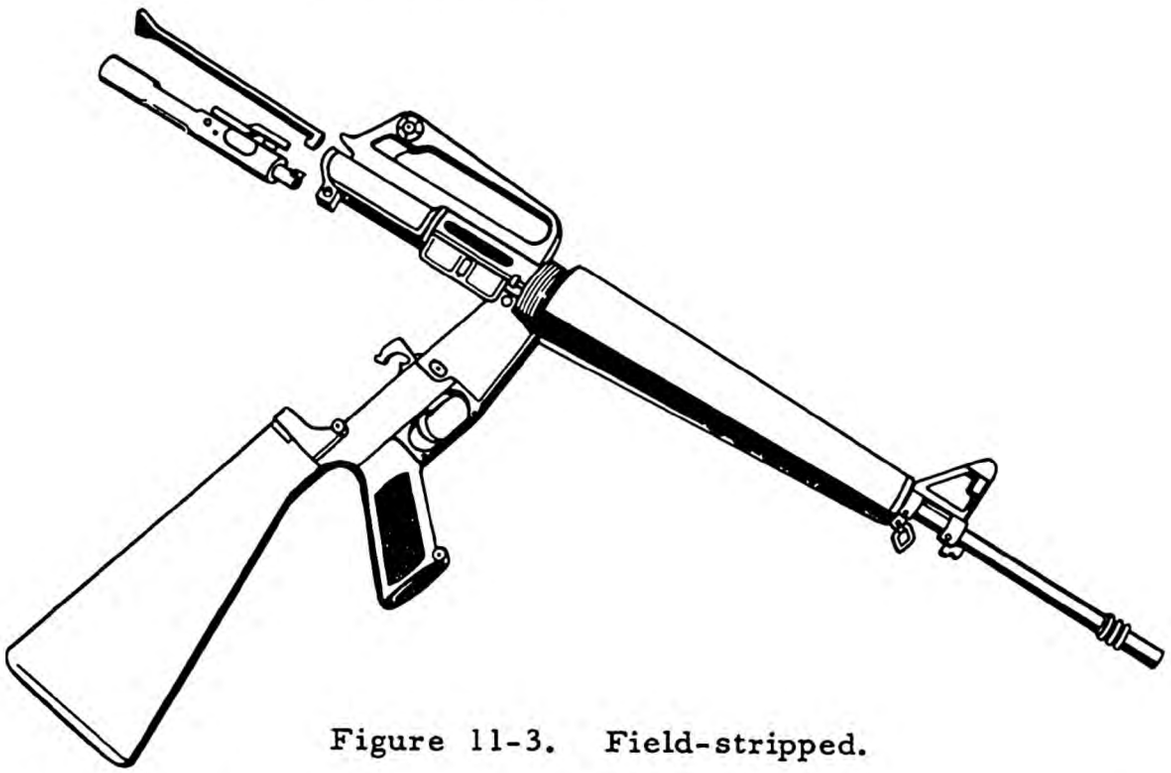

Figure 11-3. Field-stripped.

Removing magazine. Grasp the magazine in the left hand and depress the magazine catch with the finger of the right hand. (See fig. 11-4.)

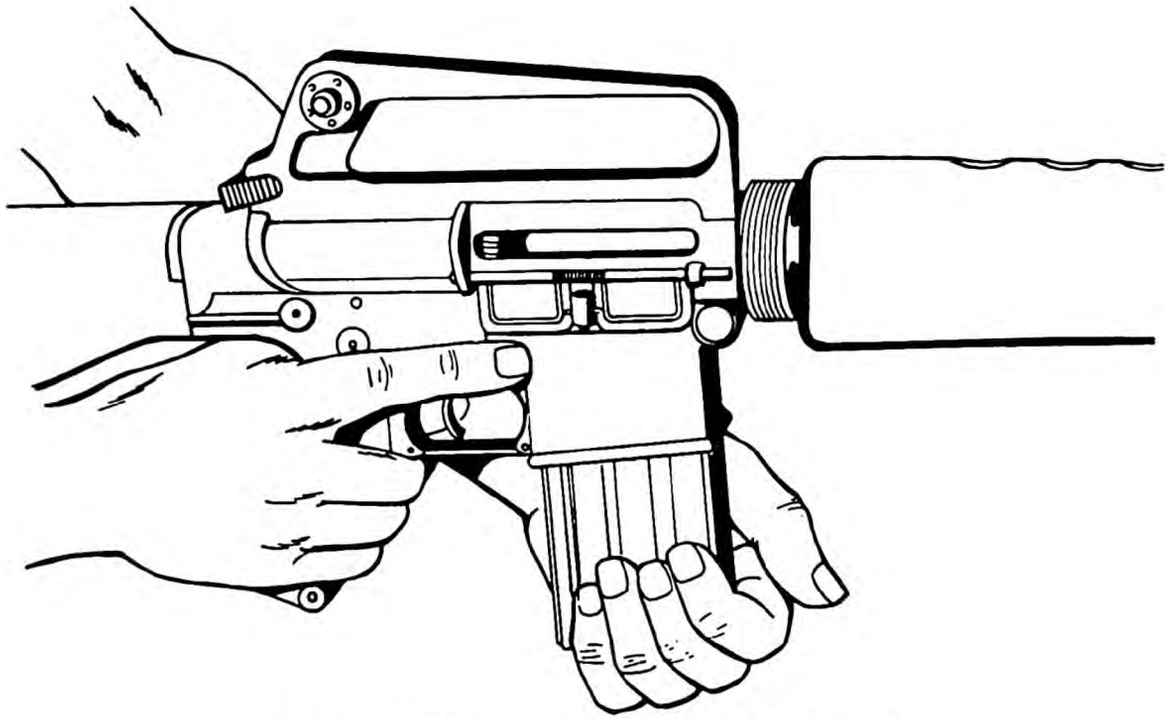

Figure 11-4. Removing magazine.

Visual Inspection of Chamber. Pull charging handle to rear, lock bolt to rear by depressing the bolt catch with the left forefinger. (See fig. 11-5.) Return the charging handle to closed position. (The action should remain open.) Look into the receiver and chamber to make certain it is clear.

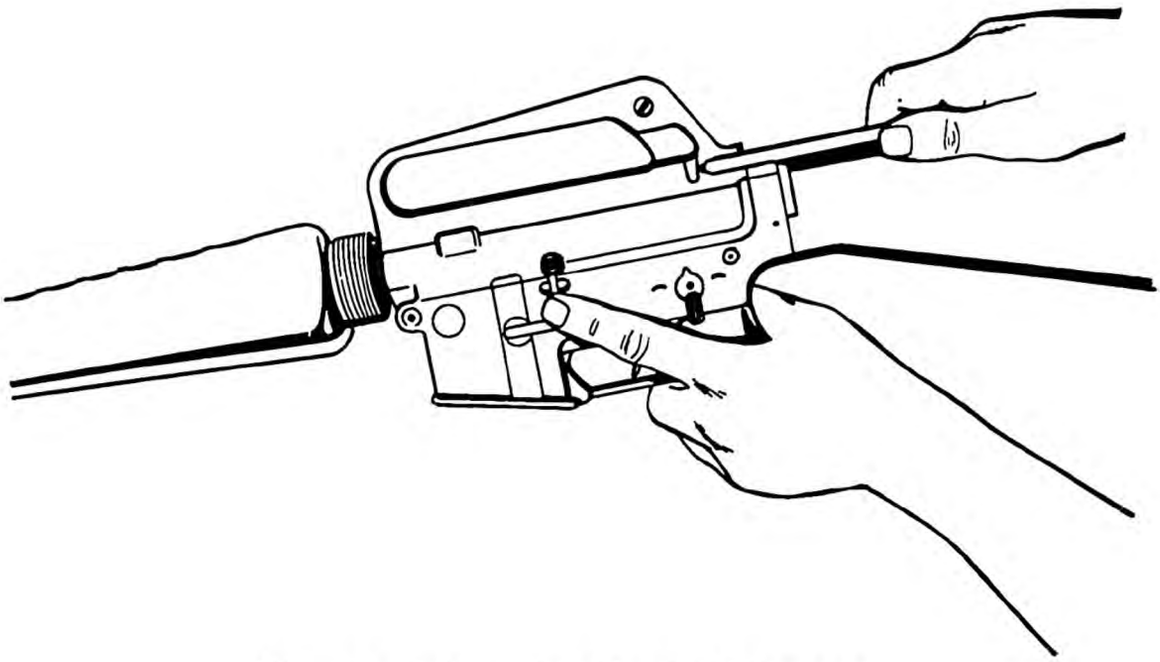

Figure 11-5. Locking bolt to rear.

Move the safety to the "safe" position, as in figure 11-6.

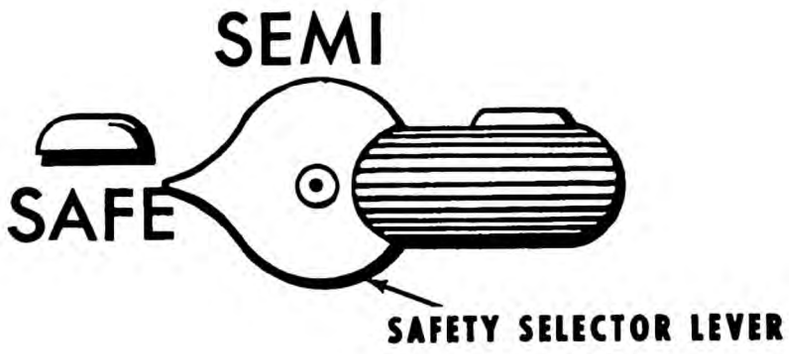

Figure 11-6. Close up of safety selector lever.

Removing Bolt and Bolt Carrier Group. Release the bolt catch allowing the bolt to go forward.

With a convenient tool (screwdriver, punch, dummy round) push the takedown pin to the right side as far as it will go, as shown in figure 11-7.

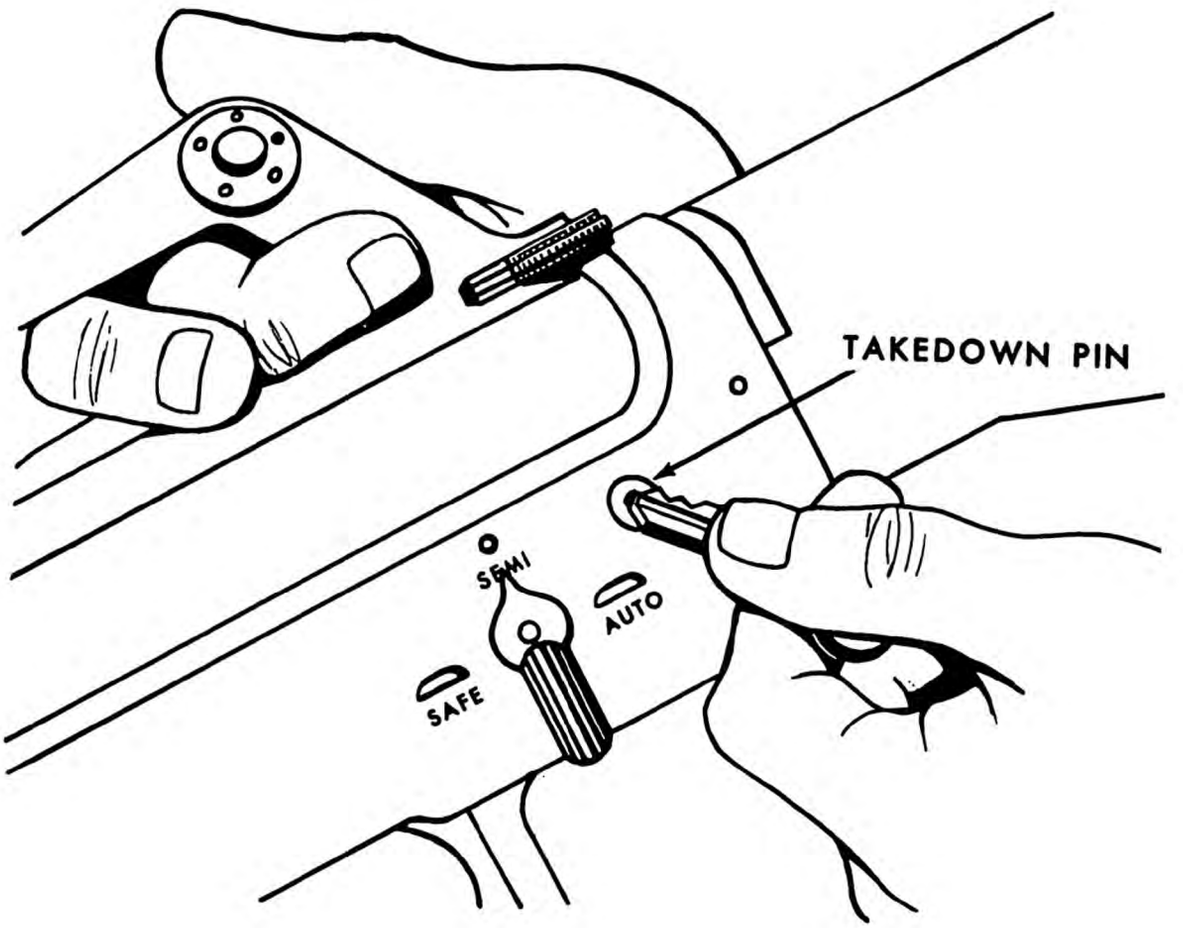

Figure 11-7. Takedown pin.

Push down on stock while holding the carrying handle or handguard. See figure 11-8 on next page.

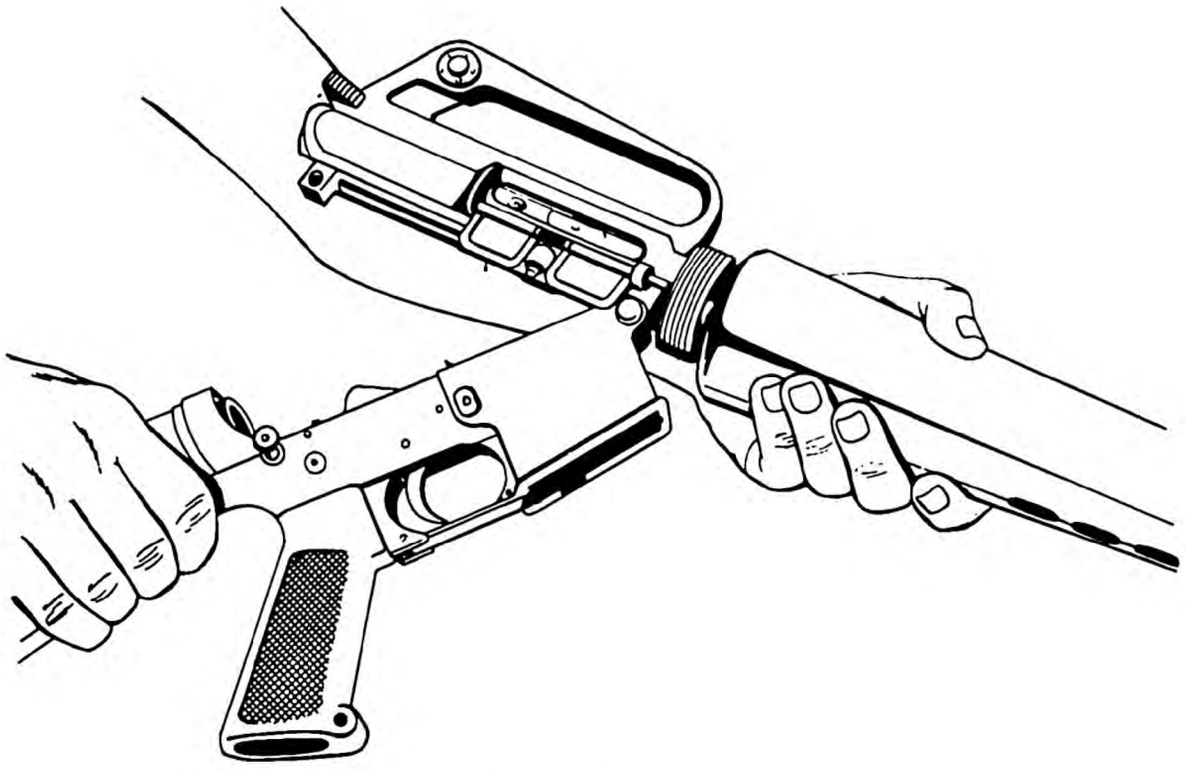

Figure 11-8. Opening receiver.

Pull out on charging handle as shown in figure 11-9, then remove the bolt carrier group from the receiver, as shown in figure 11-10. (Note arrow indicating bolt carrier key.)

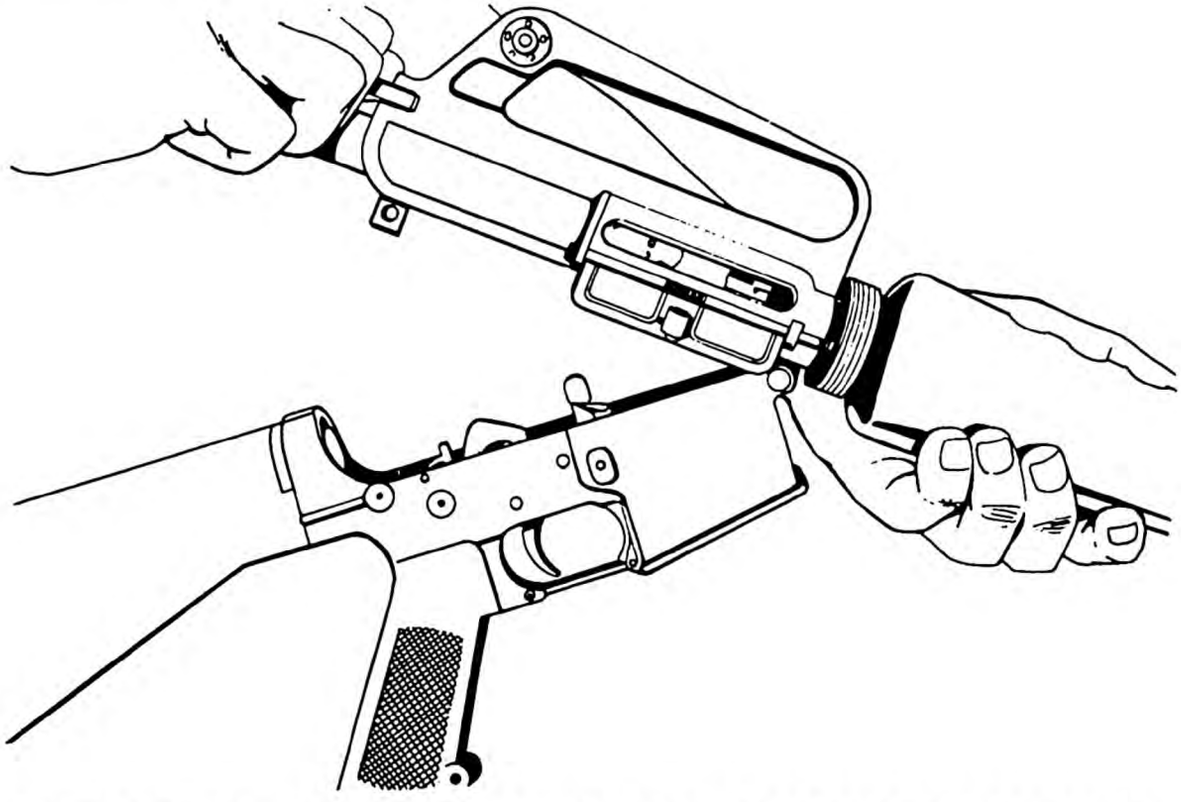

Figure 11-9. Removing charging handle and bolt carrier group.

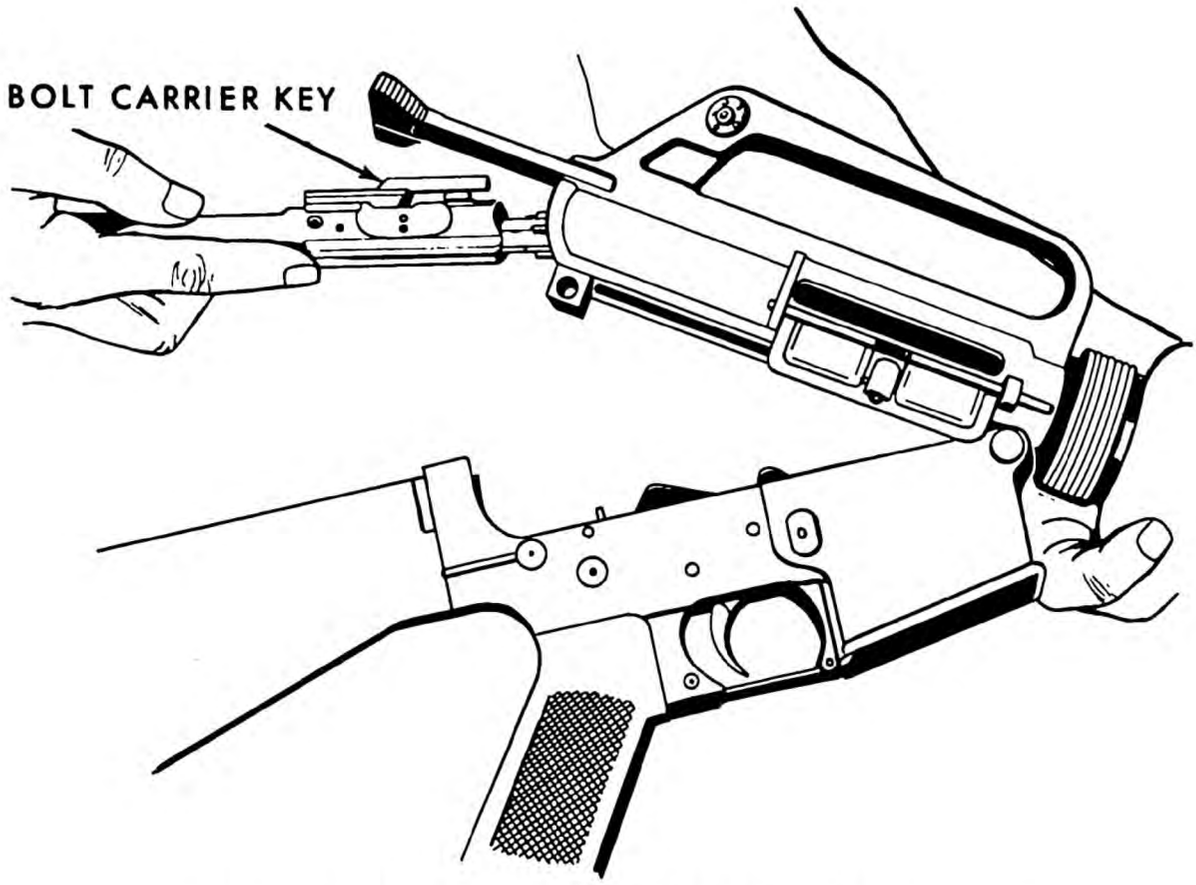

Figure 11-10. Bolt carrier group removed.

Remove the charging handle by pulling back and down. Notice the lugs on the side of the charging handle and locate the corresponding cut-out in the upper receiver, as indicated by arrows in figure 11-11.

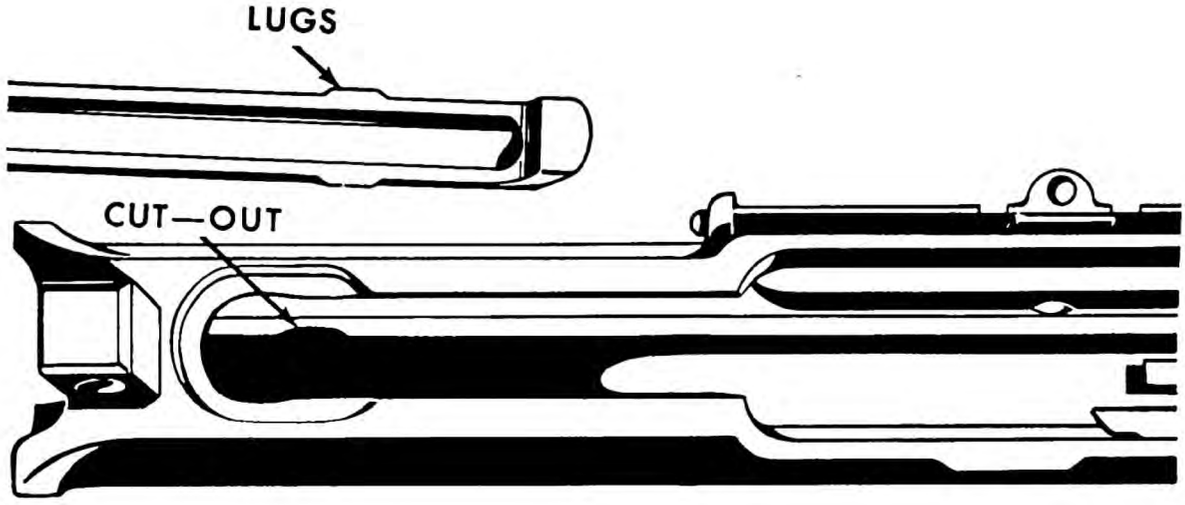

Figure 11-11. Charging handle lugs and receiver cut-out.

Disassembly of Bolt Carrier Group. Remove the firing pin retaining pin. Remove the firing pin. Remove the bolt cam pin. Pull out bolt. Check but do not disassemble the following parts on the bolt: Extractor, Ejector, Extractor Pin, Piston Rings. See figure 11-12.

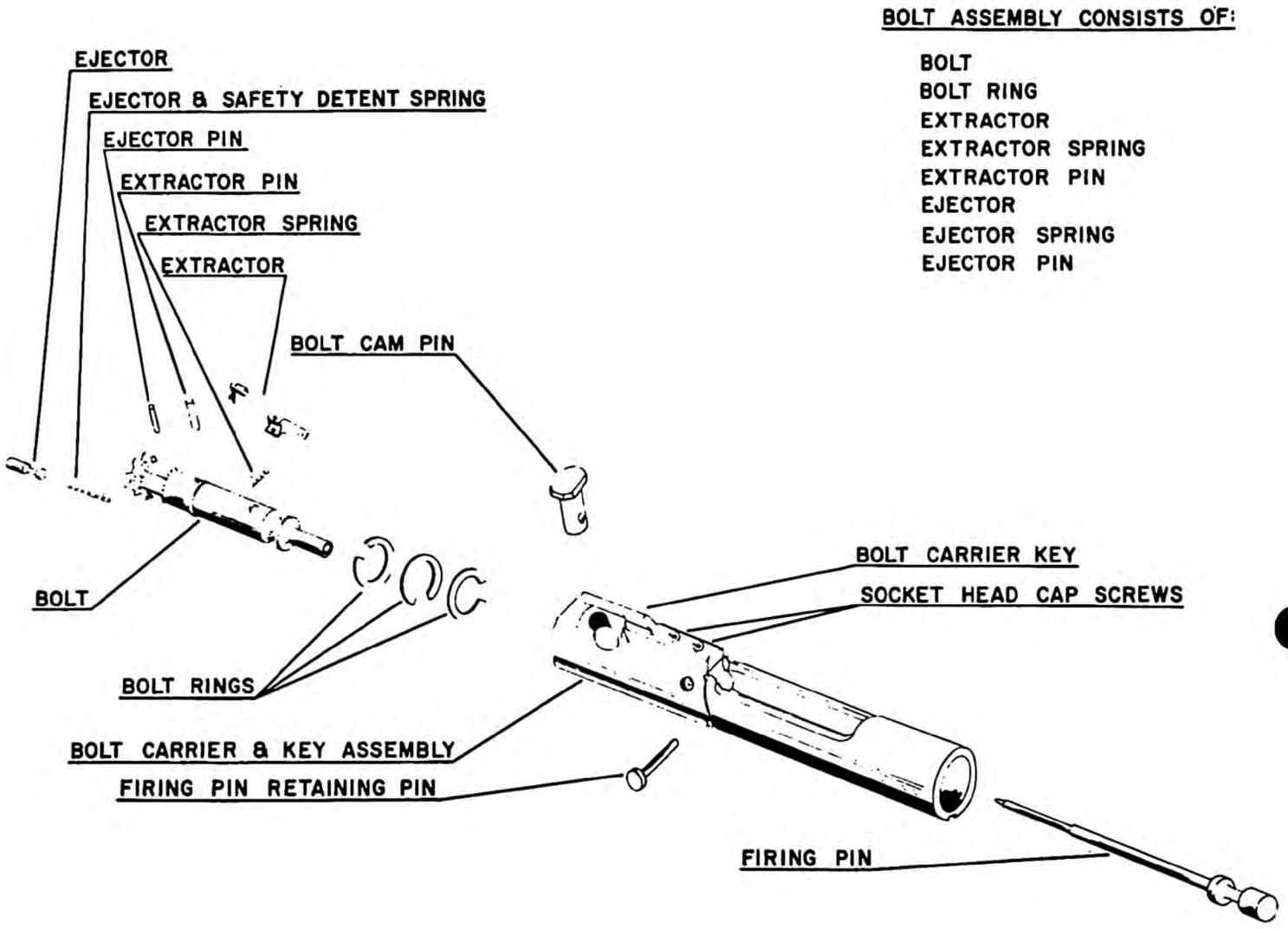

Figure 11-12. Exploded view of bolt carrier group.

This completes the field-stripping of the M16. The weapon should be field-stripped for cleaning.

ASSEMBLY

The weapon is assembled by assembling the bolt carrier group, replacing the charging handle, replacing the bolt carrier group, and then locking the upper and lower receiver groups together.

Replace the charging handle by inserting the lugs into the cutout slots in the upper receiver. Push the charging handle about two (2) inches into the receiver.

Assemble bolt carrier group in reverse order. (See fig. 11-12.)

Grasp the bolt carrier in one hand and the bolt in the other, pulling out the bolt, as shown in figure 11-13.

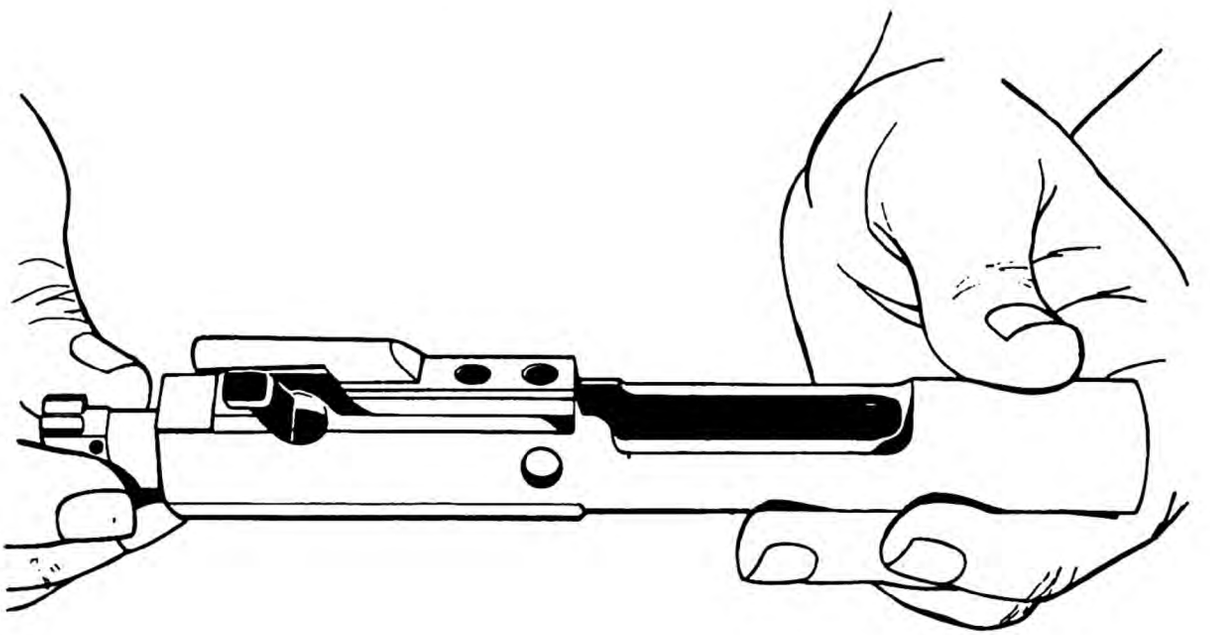

Figure 11-13. Pulling bolt forward.

Insert the bolt into the upper receiver. (See fig. 11-14.) Make sure the bolt carrier key goes into the charging handle. Then snap the bolt carrier all the way into the receiver, as shown in figure 11-15.

Close the receiver and push the takedown pin into place.

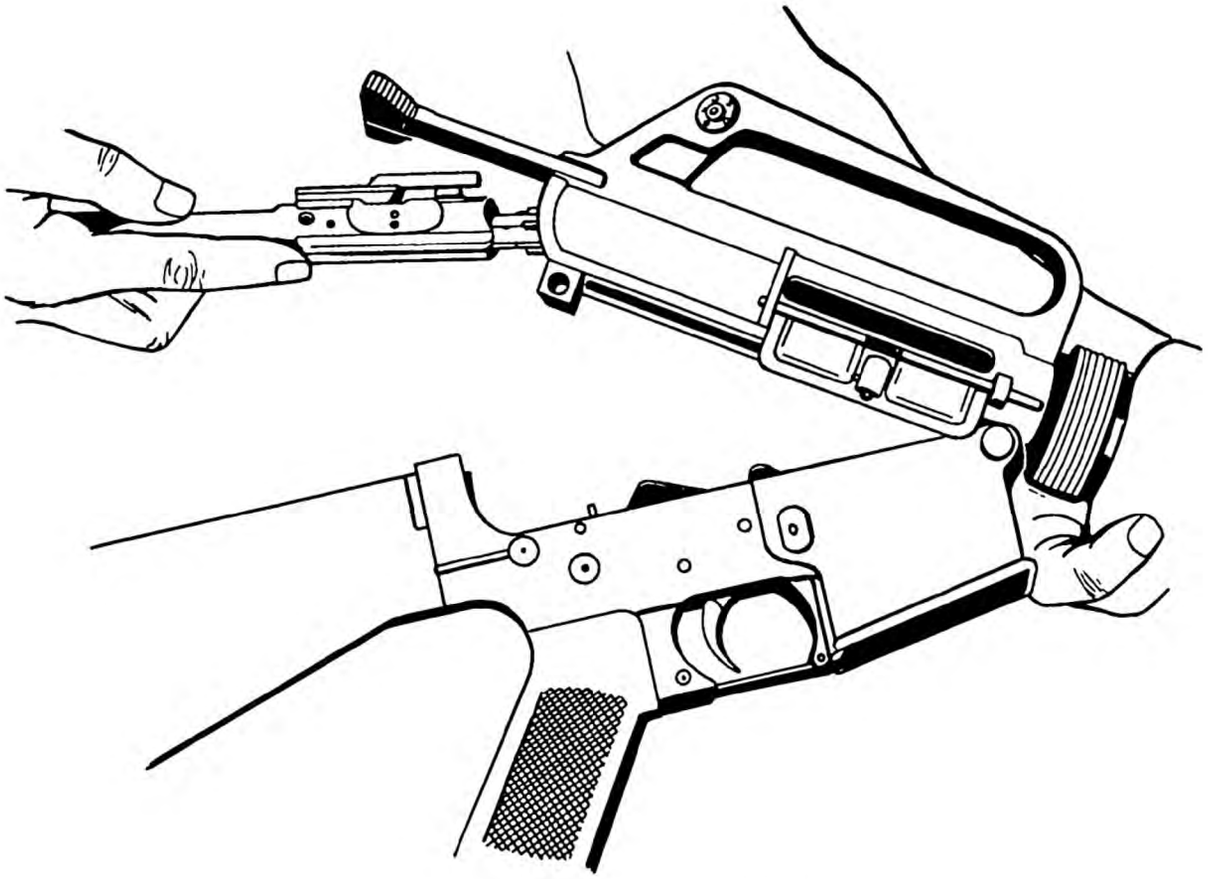

Figure 11-14. Replacing bolt carrier group.

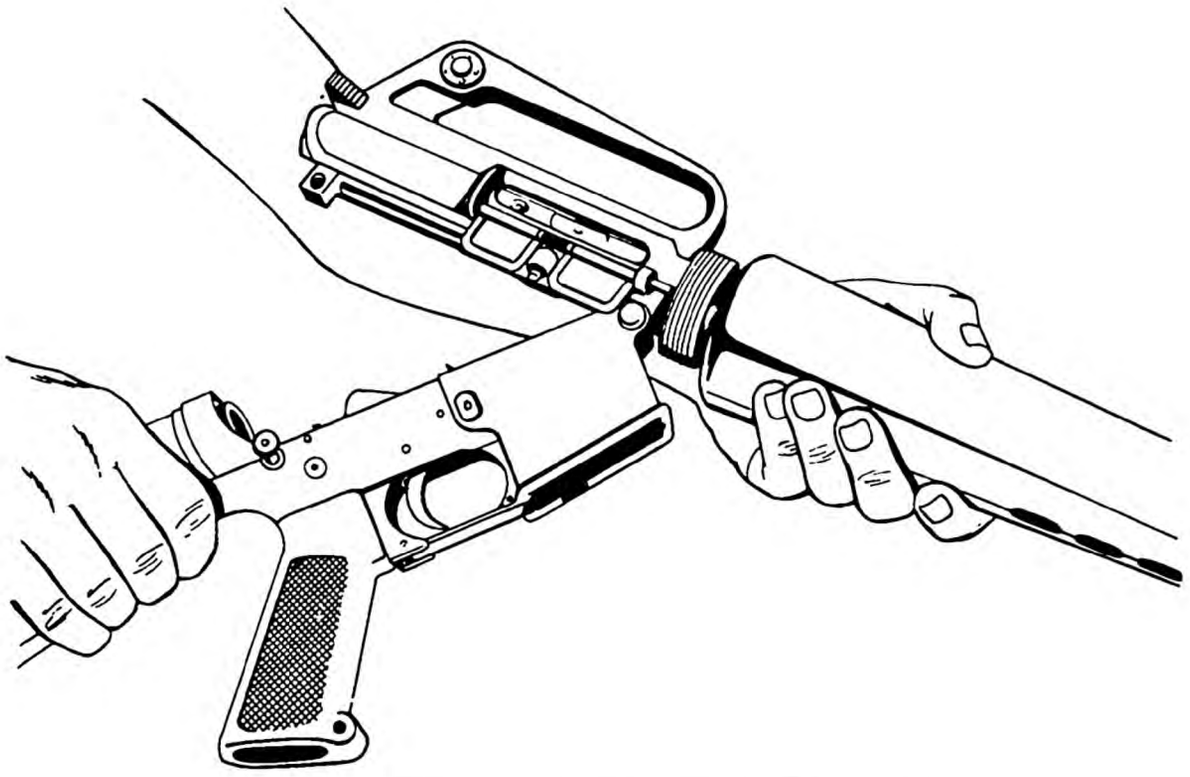

Figure 11-15. Locking bolt in receiver.

FUNCTION CHECK

Perform a function check as follows: Check the safety by squeezing the trigger. The hammer should not fall. Turn the safety to semi-auto, squeeze the trigger. The hammer should fall. Hold the trigger to the rear, turn the selector to auto, cock the weapon by pulling the charging handle to the rear and allowing it to go forward. Release the trigger and squeeze. The hammer should not fall.

DETAILED DISASSEMBLY AND ASSEMBLY

Dissassembly of Barrel and Receiver Group. Remove the handguards. Depress the handguard retaining ring, pull out and down on the left handguard. Then remove the right handguard. (See fig. 11-16.)

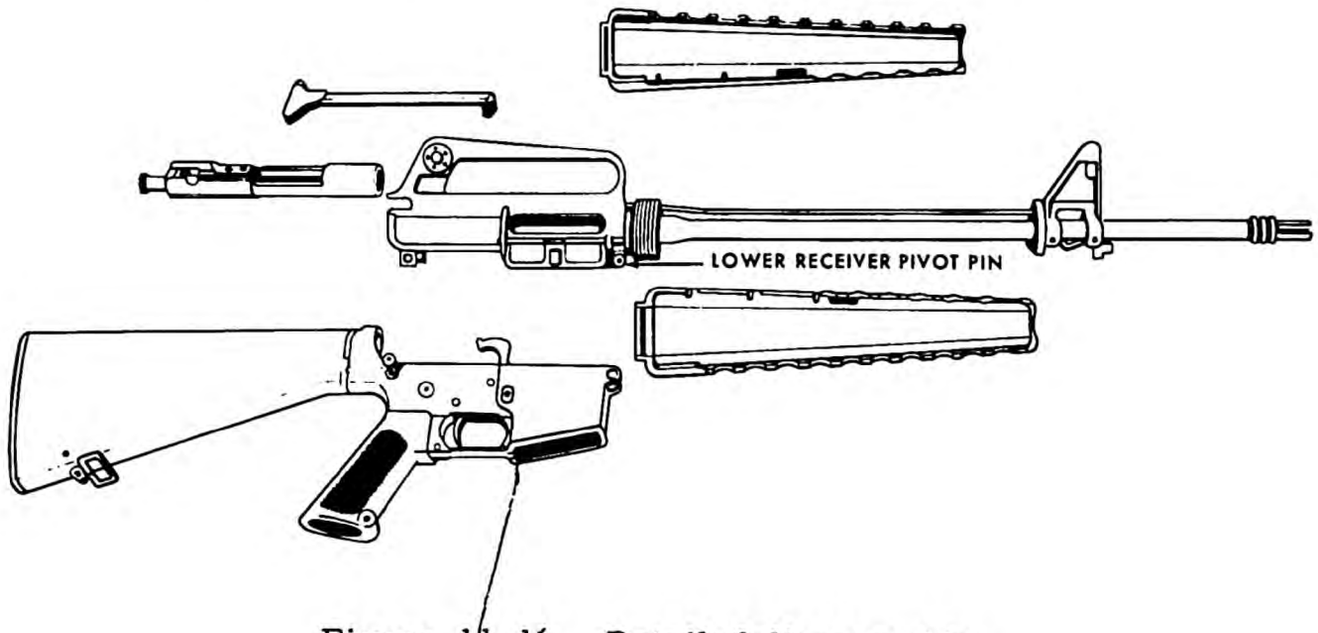

Figure 11-16. Detailed disassembly.

Remove the lower receiver group from the upper receiver group by pushing out the lower receiver extension pivot pin, as shown by arrow in figure 11-16.

Remove the bolt carrier and charging handle.

Remove the buffer tube assembly from the lower receiver and stock. Depress the buffer detent, allowing the buffer tube assembly to come out. CAUTION: STRONG SPRING. (Make sure hammer is cocked and selector is on safe.) See figure 11-17.

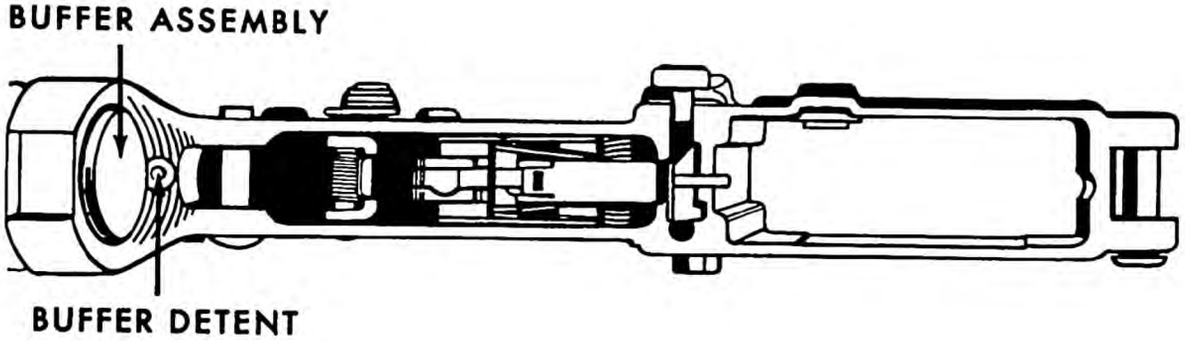

Figure 11-17. Lower receiver group.

Observe inside lower receiver group:

Hammer
Sear
Auto-sear
Bolt stop
Trigger

Assembly of Barrel and Receiver Group. Replace buffer tube assembly and spring. Make sure the buffer detent is in place.

Join upper receiver to the lower receiver and insert the lower receiver extension pivot pin. Make sure the pin locks into hole.

Replace the bolt carrier group and charging handle.

Close receiver and push takedown pin into place.

Check function of the weapon:

Safety
Sear
Auto-sear

ADDITIONAL HISTORY AND INFORMATION

Tested results of penetration at 500 yards:

a. 7 to 13 one-inch pine boards
b. 10 gauge (.135) steel plate
c. Both sides of US steel helmet and liner
d. US type body armor

Tested results of penetration at 200 yards: 3/16" steel plate

Tested results at 75 yards (automobile):

a. Bumper steel
b. Frame steel
c. Motor block (enters — does not exit)
d. Both sides of car (broadside shot)
e. Trunk lid, back seat, dashboard, fire wall
f. Wheel drums, coil springs, and shock absorbers
g. Will not ricochet. Penetrations at angles of 5° from 80 yards.

Semiautomatic. Each time a round is fired, many parts inside the rifle function in a given order. This is known as the cycle of operation. A knowledge of what happens inside the rifle will help you understand the cause of and remedy for various stoppages or malfunctions.

a. Cycle of operation. The cycle of operation is divided into seven steps: Firing, unlocking, cocking, extracting, ejecting, feeding and chambering, and locking. Although described separately here, the functions of the parts occur almost simultaneously. With the selector set for semiautomatic, a full magazine in the rifle, and a cartridge in the chamber, the following cycle of operation takes place:

(1) Firing. When the trigger is pulled, it rotates on the trigger pin causing the trigger sear to release the hammer. The hammer is thrown forward by the hammer spring causing the hammer to strike the firing pin which detonates the primer, firing the cartridge. This is shown in figure 11-18. Gas pressure drives the bullet down the barrel.

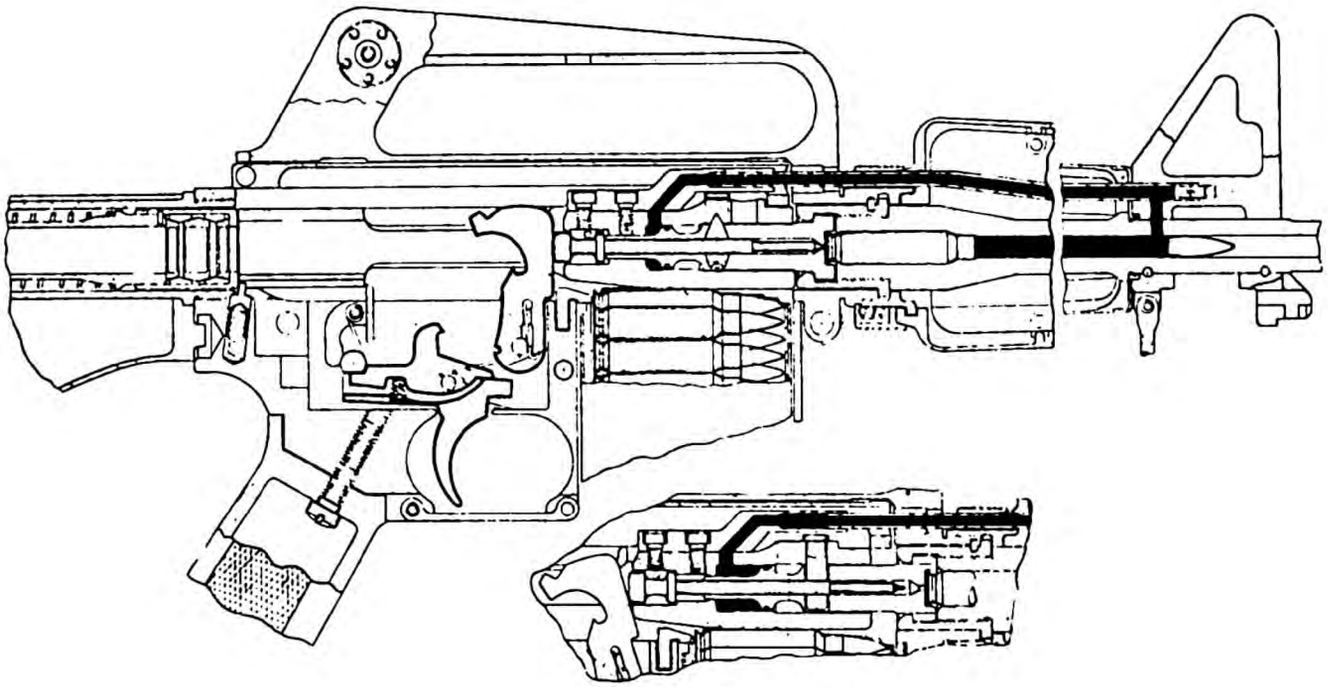

Figure 11-18. Gas pressure.

(2) Unlocking. As the bullet passes the gas port, gas is routed through the gas tube into the bolt carrier key. Gas pressure in the chamber formed by the bolt and bolt carrier drives the bolt carrier to the rear. When the bolt carrier moves to the rear, the bolt cam pin rotates the bolt and disengages the bolt lugs from the lugs of the barrel extension as shown in figure 11-19.

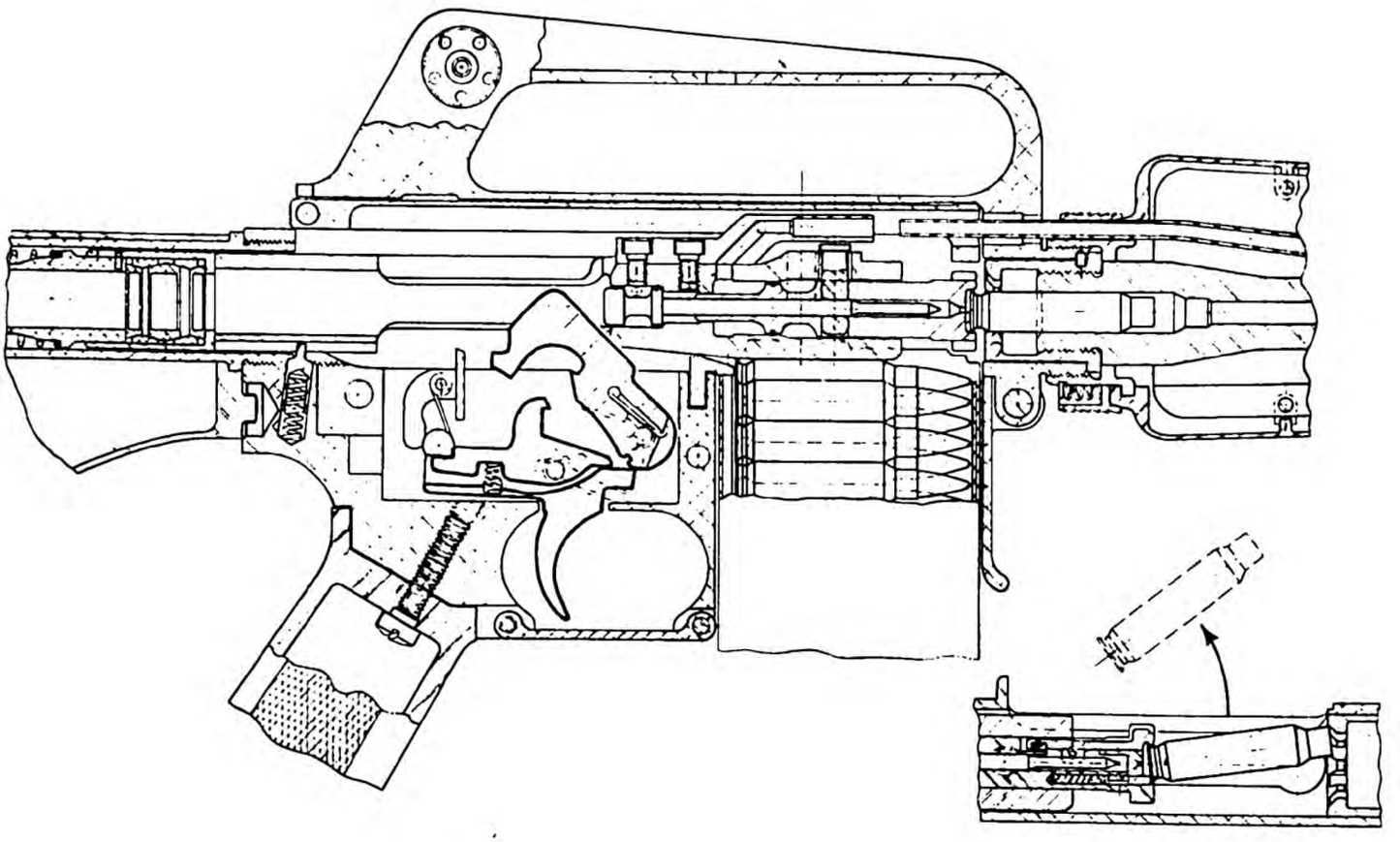

Figure 11-19. Unlocking.

(3) Cocking. As the bolt carrier moves rearward, it returns the hammer to the cocked position and compresses the action spring of the buffer as shown in figure 11-19.

(4) Extracting. As the bolt and bolt carrier move rearward, the extractor on the bolt withdraws the expended cartridge from the chamber as shown in figure 11-19.

(5) Ejecting. The ejector in the face of the bolt throws the empty cartridge out the ejection port as the case clears the receiver. This is shown in figure 11-19.

(6) Feeding–Chambering. The rearward motion of the bolt carrier is arrested by the buffer assembly and action spring guide. The compressed action spring then forces the bolt carrier toward the chamber. On its forward motion, the face of the bolt picks up a cartridge from the magazine (feeding), and thrusts it into the chamber (chambering). The chambering step is shown in figure 11-20.

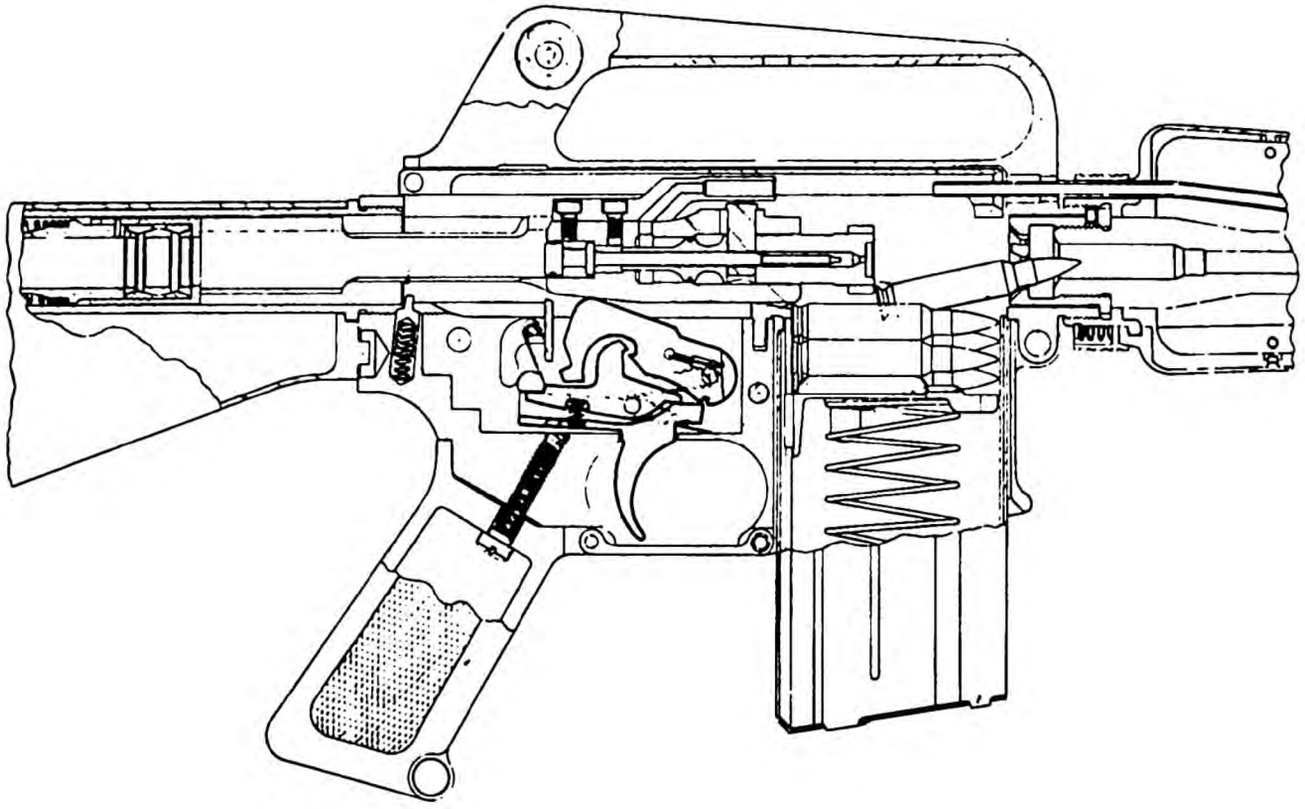

Figure 11-20. Feeding-chambering.

(7) Locking. As the bolt lugs enter the barrel extension,. the ejector is deppressed against the left side of the head. The extractor snaps into the cannelure (groove) of the cartridge case. As the bolt carrier enters the final one-half inch of its closing stroke, the bolt cam pin moves out of the receiver guide. The bolt carrier cam track rotates the bolt and locks it into the barrel extension. This completes one loading cycle.

b. Sear and disconnect. The disconnect prevents the rifle from firing full automatic when the safety is in the SEMI position. When the trigger is pulled, the disconnect is rotated with the trigger by the action of the disconnect spring. During the cocking step, the hook of the disconnect engages the upper inside notch of the hammer as shown in figure 11-20. This holds the hammer back and prevents a second shot. When the trigger is released, the trigger spring causes the trigger to return to the normal position carrying the disconnect backward with it. The disconnect hook actually releases the hammer, the trigger sear has moved in front of the hammer notch and the hammer drops from the disconnect to the trigger sear. The weapon is then ready for a second shot.

Automatic. The cycle of operation for automatic is approximately the same as for semiautomatic. However, when the hammer is moved into the cocked position by the bolt carrier, the automatic sear engages the top notch in the hammer. (illustrated in fig. 11-21.)

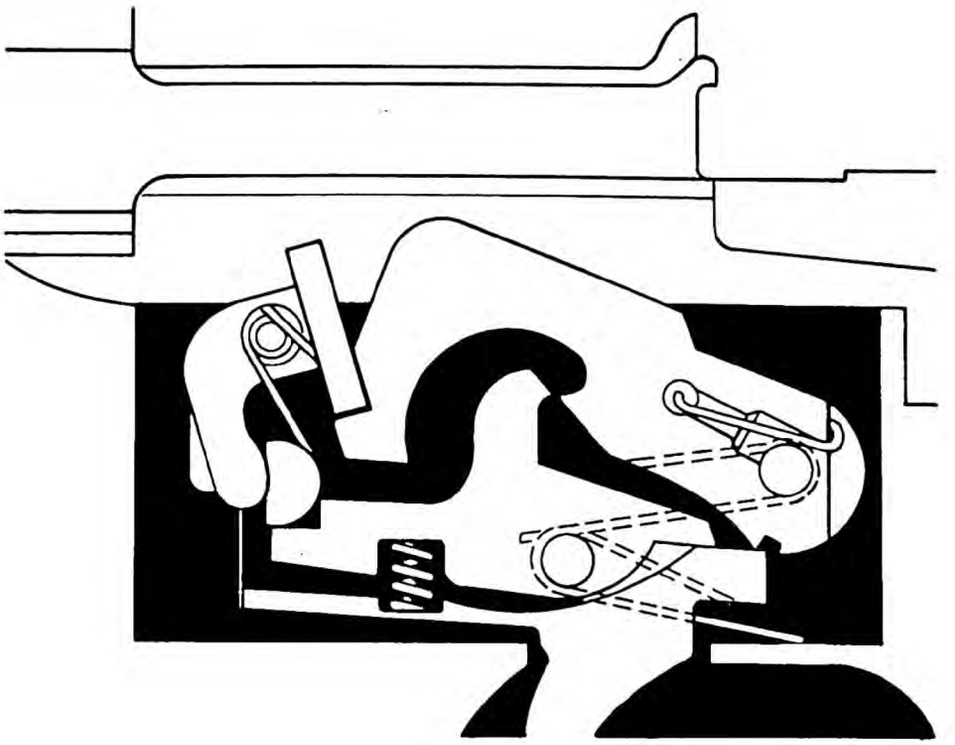

Figure 11-21. Automatic sear.

The sear holds the hammer in a cocked position until the bolt carrier strikes the upper edge of the automatic sear during its moment of locking. This allows the hammer to fall and fire the next round. The cycle repeats and firing continues until the trigger is released or the magazine is empty.

MALFUNCTIONS

The following chart lists some of the more common malfunctions, causes, and corrective actions to be taken.

Malfunction	Cause	Corrective Action
Bolt fails to lock to the rear after the last round.	(1) Faulty magazine. (2) Broken bolt catch. (3) Loose bolt carrier key.	1. Replace magazine. 2. Replace bolt catch or spring. 3. Tighten bolt carrier key cap screws.
Failure to feed.	(1) Binding bolt and bolt carrier. (2) Restricted gas tube or key. (3) Restricted buffer. (4) Loose bolt carrier.	1. Disassemble and clean (on a new weapon, one or two drops of oil on the pistol rings will remedy this trouble). 2. Disassemble and clean. 3. Disassemble and clean. Inspect for burrs. 4. See (3) above
Failure to cycle with selector set at AUTO.	(1) Broken automatic sear or spring. (2) Faulty selector lever. (3) Loose bolt carrier.	1. Replace faulty part. 2. Replace. 3. Tighten cap screws.
Failure to fire.	(1) Broken firing pin. (2) Broken hammer spring. (3) Broken disconnect or spring. (4) Misalined or worn trigger or hammer spring.	Replace. Replace. Replace. Replace.
Fires with safety set on SAFE.	Faulty safety lever.	Replace.
With safety lever on SEMI, fires when trigger is released.	Faulty or misalined trigger pin.	Replace.

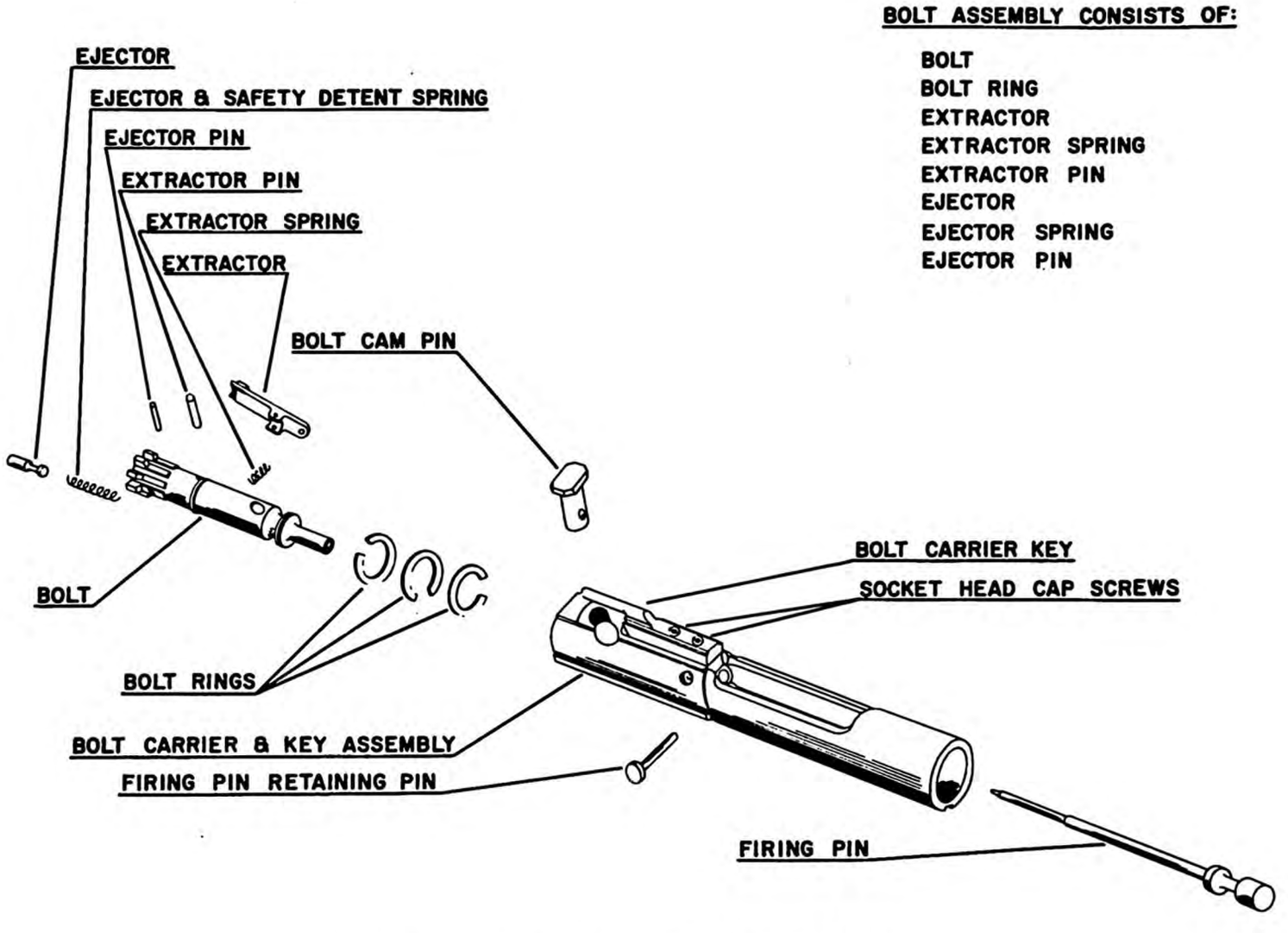

BOLT CARRIER GROUP

Figure 11-22

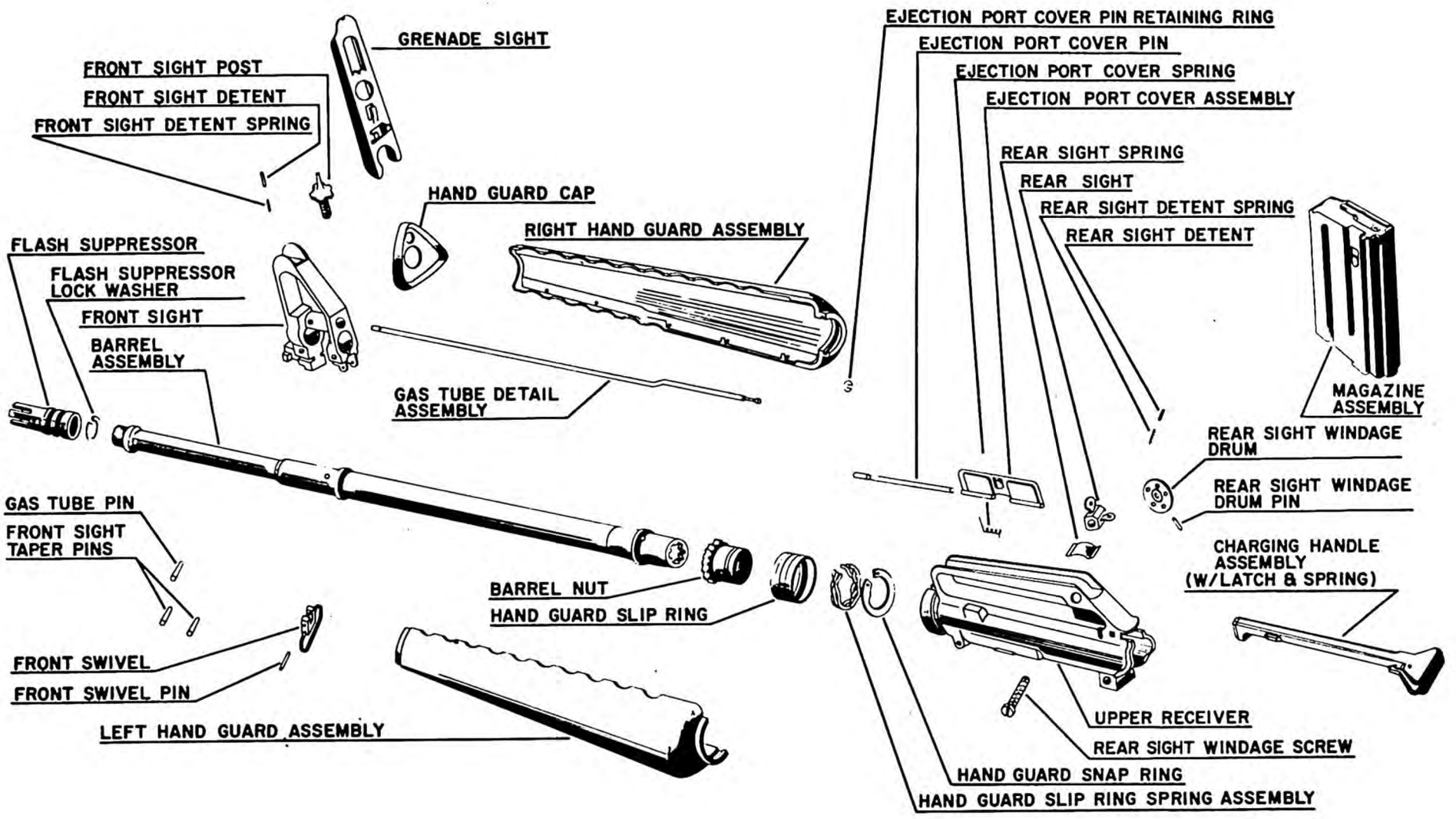

Figure 11-23

UPPER RECEIVER & BARREL GROUP

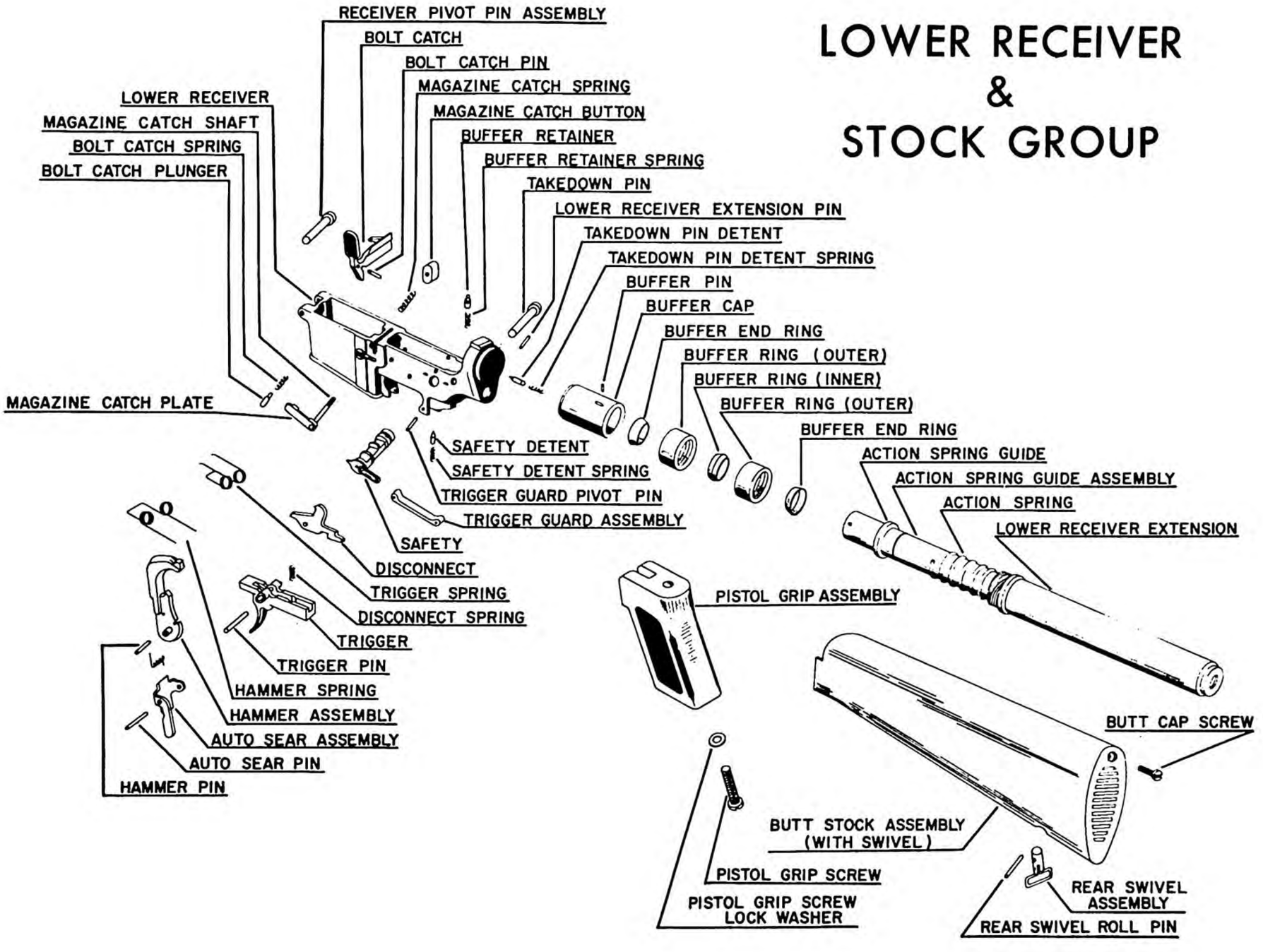
LOWER RECEIVER
&
STOCK GROUP
RECEIVER PIVOT PIN ASSEMBLY
BOLT CATCH
BOLT CATCH PIN
MAGAZINE CATCH SPRING
MAGAZINE CATCH BUTTON
BUFFER RETAINER
BUFFER RETAINER SPRING
TAKEDOWN PIN
LOWER RECEIVER EXTENSION PIN
TAKEDOWN PIN DETENT
TAKEDOWN PIN DETENT SPRING
BUFFER PIN
BUFFER CAP
BUFFER END RING
BUFFER RING (OUTER)
BUFFER RING (INNER)
BUFFER RING (OUTER)
BUFFER END RING
ACTION SPRING GUIDE
ACTION SPRING GUIDE ASSEMBLY
ACTION SPRING
LOWER RECEIVER EXTENSION
LOWER RECEIVER
MAGAZINE CATCH SHAFT
BOLT CATCH SPRING
BOLT CATCH PLUNGER
MAGAZINE CATCH PLATE
SAFETY DETENT
SAFETY DETENT SPRING
TRIGGER GUARD PIVOT PIN
TRIGGER GUARD ASSEMBLY
SAFETY
DISCONNECT
TRIGGER SPRING
DISCONNECT SPRING
TRIGGER
TRIGGER PIN
HAMMER SPRING
HAMMER ASSEMBLY
AUTO SEAR ASSEMBLY
AUTO SEAR PIN
HAMMER PIN
PISTOL GRIP ASSEMBLY
BUTT CAP SCREW
BUTT STOCK ASSEMBLY
(WITH SWIVEL)
PISTOL GRIP SCREW
PISTOL GRIP SCREW
LOCK WASHER
REAR SWIVEL
ASSEMBLY
REAR SWIVEL ROLL PIN

Figure 11-24

UNIT 11

MECHANICAL TRAINING, U. S. RIFLE, CALIBER .30, M1

OBJECTIVE

To understand the nomenclature, assembly, and disassembly, functioning, malfunctions, and stoppages, tools and gauges, and sight adjustments of the U. S. Rifle, Caliber .30, M1.

NOMENCLATURE, DISASSEMBLY AND ASSEMBLY

The U. S. Rifle, Caliber .30, M1 is a clip-fed, gas-operated, air-cooled, semiautomatic shoulder weapon. Its primary characteristics are:

Weight	9.5 lbs
Length (overall)	43.6 inches
Barrel length	24 inches
Average rate of trained rifleman fire per minute	16 to 24 rounds per minute
Rear-sight graduation	1 1/2 min. clicks

The individual airman is authorized to disassemble his rifle to the extent called field stripping. Chart 1 shows the parts you are permitted to disassemble without supervision. This amount of disassembly is all that is necessary for normal maintenance. Your weapon should be disassembled and assembled only when required for maintenance or instructional purposes. Repeated assembly and disassembly creates wear of parts that soon make the weapon unserviceable and reduces its accuracy.

The rifle was designed so that it may be taken apart and put together easily. No force is needed if it is disassembled and assembled correctly. The parts of one rifle should not be interchanged with those of another unless it is absolutely necessary. To do this may change the zero and affect the rifle's operating efficiency.

Group and Parts	Individual airman	Individual airman when supervised by		Ordnance personnel only
		NCO	Officer	
Into three main groups--	X	------	--------	----------
Barrel and receiver group-	X	------	--------	----------
Except:				
Bolt assembly --------	-------	- X	--------	----------
Gas cylinder ---------	-------	------	X	----------
Gas cylinder lock-----	-------	------	X	----------
Clip latch----------	-------	X	--------	----------
Rear sight----------	-------	------	X	----------
Slide from follower ---	-------	------	--------	X
Accelerator from operating rod catch assembly----------	-------	------	--------	X
Front sight----------	-------	------	--------	X
Trigger-housing group--	-------	X	--------	----------
Except:				
Sear from trigger-----	-------	------	--------	X

Chart 1. Disassembly authorization.

Before field stripping the rifle, you should know the basic nomenclature of the rifle parts (see fig. 3-1). This shows nomenclature of the U. S. Rifle, Caliber .30, M1. Locate and learn the names of the parts shown. As you disassemble and assemble the rifle, repeat the nomenclature to yourself. This will make future instruction on the rifle easier to understand.

DISASSEMBLY INTO THREE MAIN GROUPS

The M1 rifle has three main groups: the barrel-and-receiver group, the trigger-housing group, and the stock group (see fig. 3-2). To disassemble the rifle into the three main groups, we must first clear our rifle by pulling the operating-rod handle to the rear until it locks. This also cocks the weapon. Visually check chamber for rounds. Upon satisfying yourself that the weapon is clear, depress the follower and let the operating rod go forward. Grasp the rifle with the left hand so that the base of the trigger housing is included in your grip. Place the rifle with the front sight to the left. With the thumb and forefinger of your right hand, pull downward and outward on the trigger guard. Swing the trigger guard out as far as it will go and lift out the trigger-housing group (fig. 3-3).

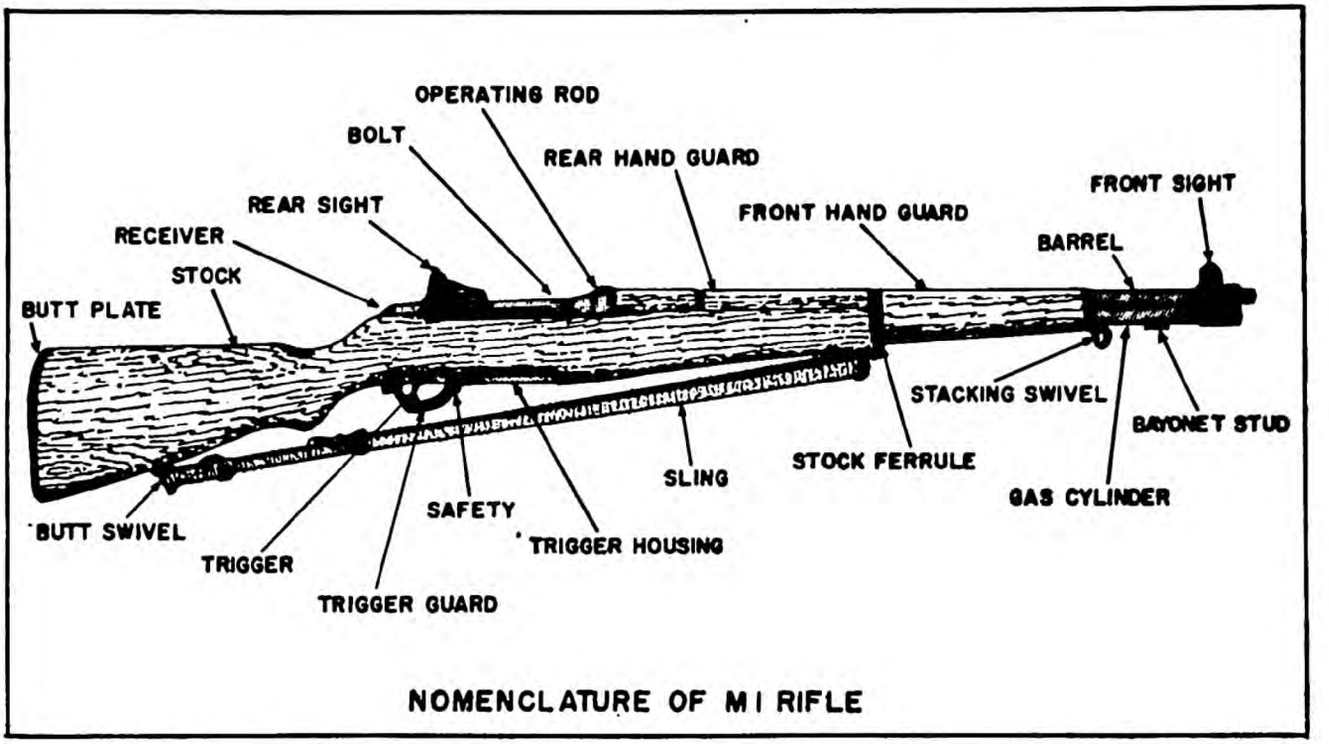

Figure 3-1

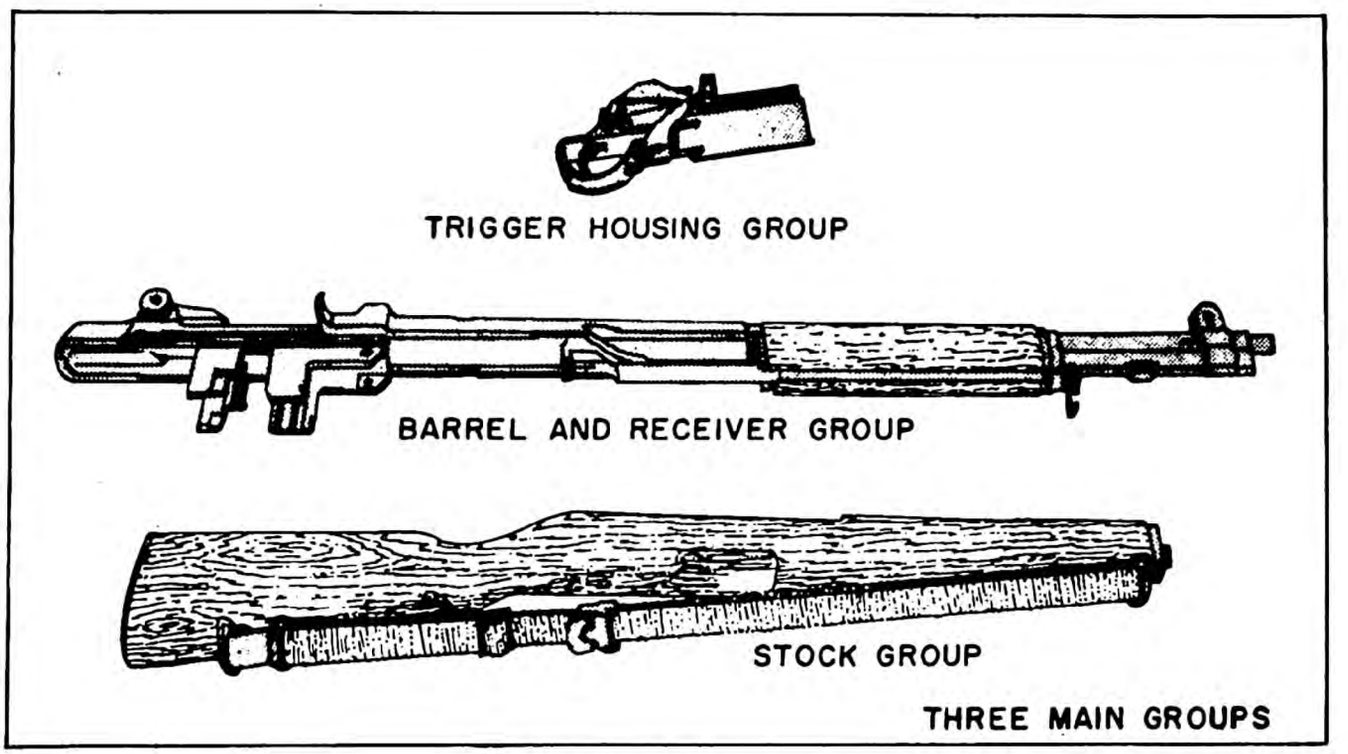

Figure 3-2

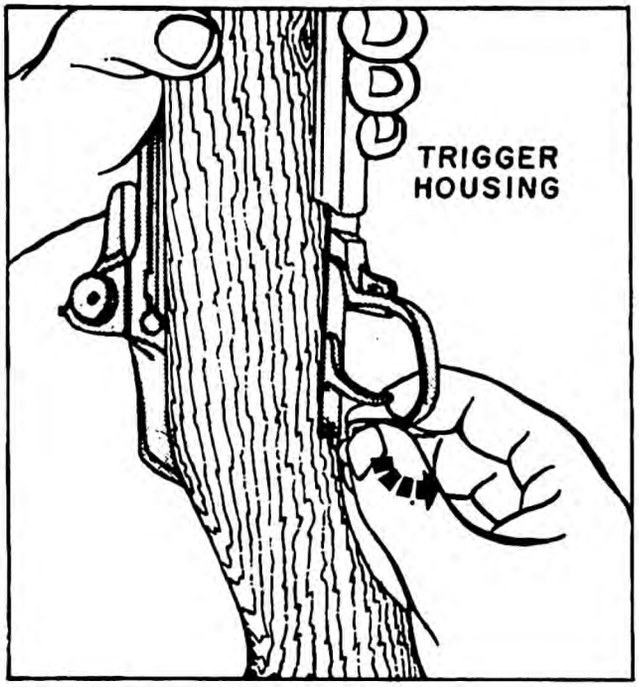

Figure 3-3

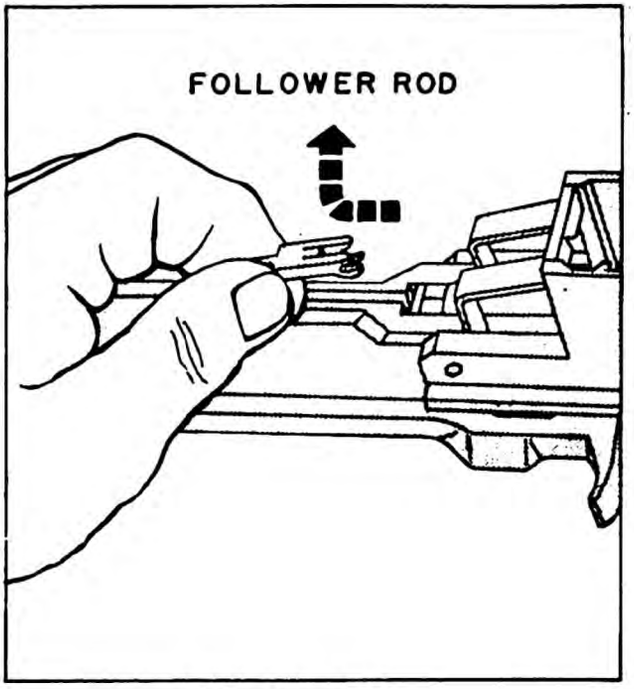

Figure 3-4

With your left hand, grasp the rear of the receiver and raise the rifle. With your right hand, give a downward blow, grasping the small of the stock. This will separate the stock group from the barrel and receiver group. Place the barrel and receiver group on a table with the sights down. (Be sure rear sight is all the way down, by turning the elevation knob.)

DISASSEMBLY OF THE BARREL AND RECEIVER GROUP

Follower Rod Spring

With the thumb and forefinger of your left hand, grasp the follower rod and disengage it from the follower arm by moving it toward the muzzle (fig. 3-4). Remove the follower rod and the operating rod spring by withdrawing them to the right. Do not separate these parts.

Follower Arm Pin

Using the tip of a cartridge, push out the follower arm pin from the far side of the receiver toward your body (fig. 3-5).

Bullet Guide, Follower Arm, Operating Rod Catch Assembly

Grasp the bullet guide, follower arm, and the operating rod catch assembly; lift them out of the receiver together (fig. 3-6). Do not remove the accelerator from the operating rod catch assembly, because the accelerator pin is riveted into its seat.

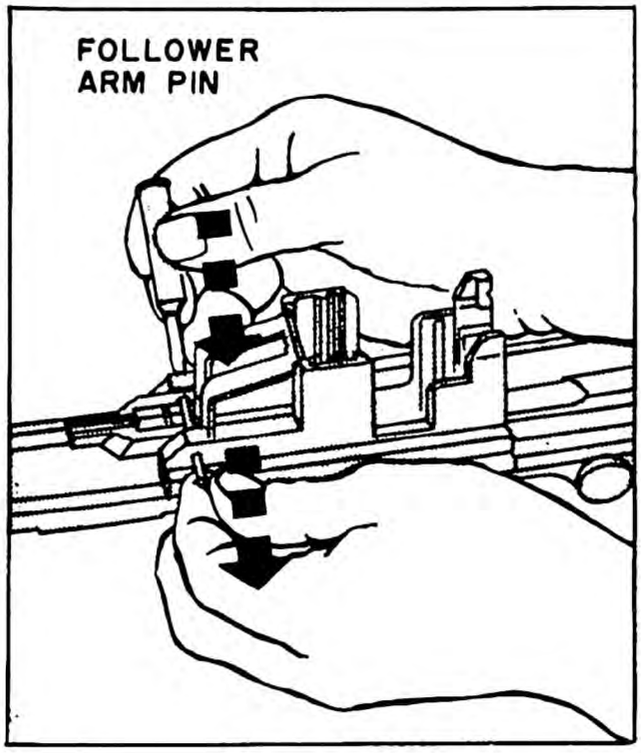

Figure 3-5

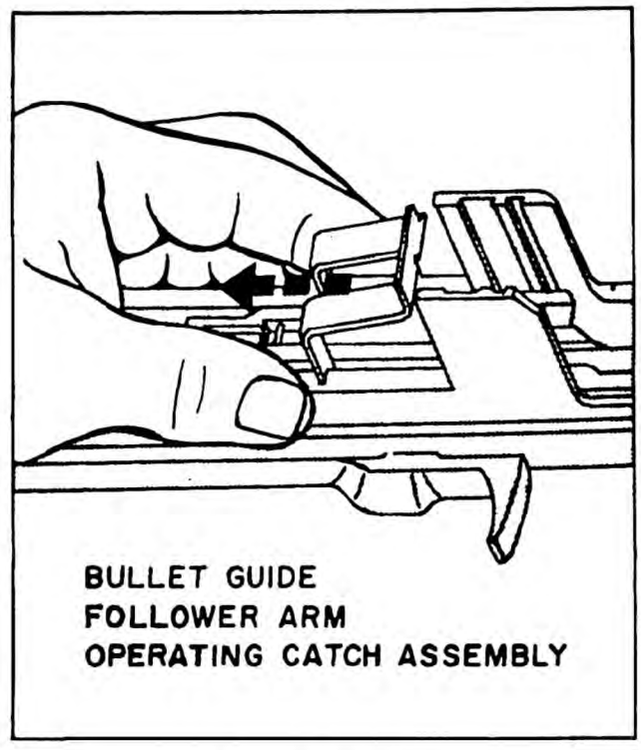

Figure 3-6

Follower

Reach down into the receiver and lift out the follower assembly. Do not separate the follower slide from the follower.

Operating Rod

Turn the barrel and receiver group over so that the sights are up, muzzle pointing away from you. With your left hand, raise the rear of the group. With the right hand, grasp the operating rod handle and pull the operating rod handle to the rear until the rear of the handle is directly under the forward edge of the windage knob. Grasping the handle, apply an upward and outward pressure. This will disengage the guide lug of the operating rod through its dismount notch on the receiver. Remove the operating rod (fig. 3-7).

Note

The operating rod is bent intentionally so that it will not bind against the enlarged portion of the barrel. DO NOT attempt to straighten it.

Bolt

Grasp the bolt operating lug with the thumb and forefinger of the right hand, slide it fully to the rear; then slide it forward, lifting it upward and

outward to the right front with a straight rotating motion. This completes the field stripping of the M1 Rifle.

ASSEMBLY OF BARREL AND RECEIVER GROUP

The barrel and receiver group is assembled in the reverse order of disassembly.

Bolt

To replace the bolt, grasp the operating lug with the thumb and forefinger of the right hand. Insert the rear end into its bearing on the bridge of the receiver. Rotate the bolt counterclockwise as far as is necessary to permit the tang of the firing pin to clear the top of the bridge. Guide the left locking lug of the bolt into its groove on the left side of the receiver. Lower the right locking lug on its bearing and slide the bolt halfway to the rear.

Operating Rod

To replace the operating rod, grasp the handle with the thumb and forefinger of the right hand. Insert the piston into the gas cylinder. Adjust the operating rod so that the recess in the hump fits over the operating lug of the bolt. While applying pressure downward and inward on the handle, pull the operating rod to the rear until the guide lug is engaged in its groove (fig. 3-8). Move the operating rod forward until the bolt is closed.

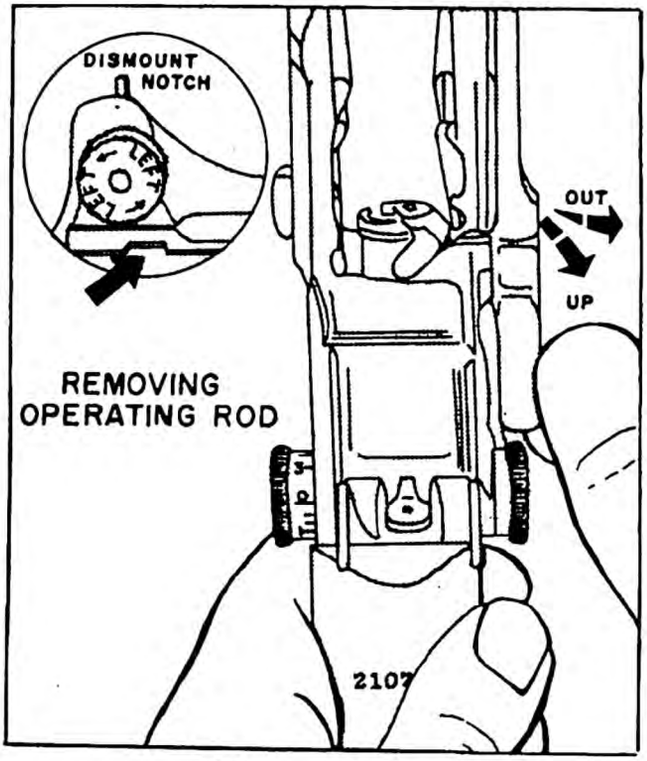

Figure 3-7

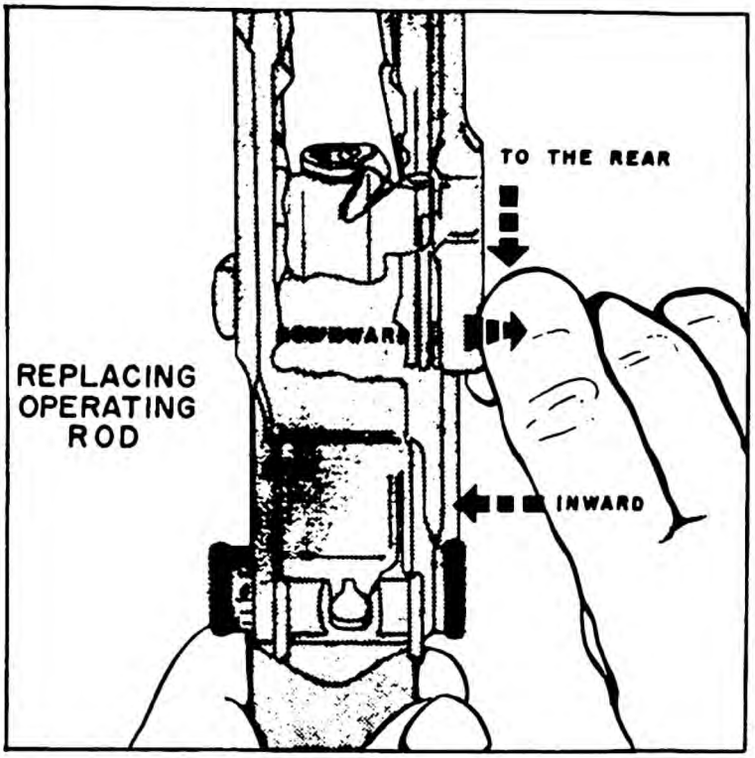

Figure 3-8

Follower

Turn the barrel and receiver group over so that the sights are down and the muzzle points to the left. Replace the follower assembly so that its guide ribs fit into their grooves in the receiver. Make sure that the slide of the follower is down and that the square hole is to the rear (fig. 3-9). The slide will rest against the bolt.

Bullet Guide

To replace the bullet guide, grasp the guide with the thumb and forefinger of the left hand. Insert the shoulder into its slots in the receiver so that the hole in the toe of the bullet guide lines up with the holes in the receiver (fig. 3-10).

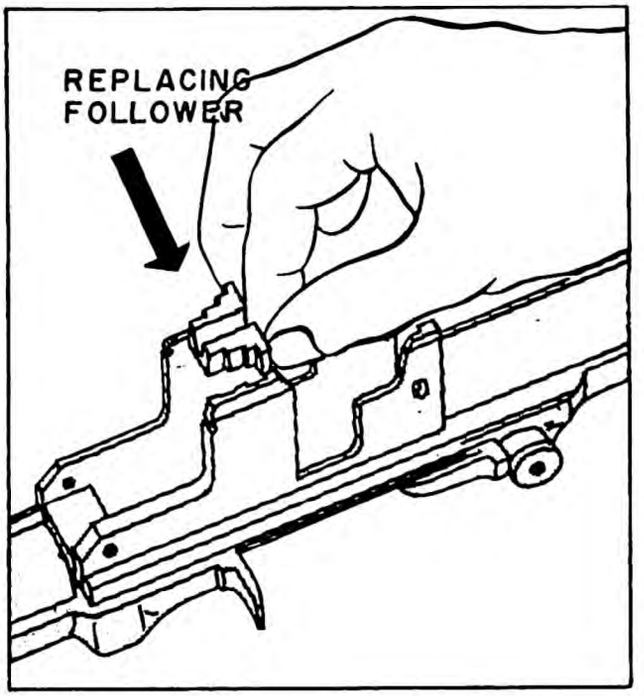

Figure 3-9

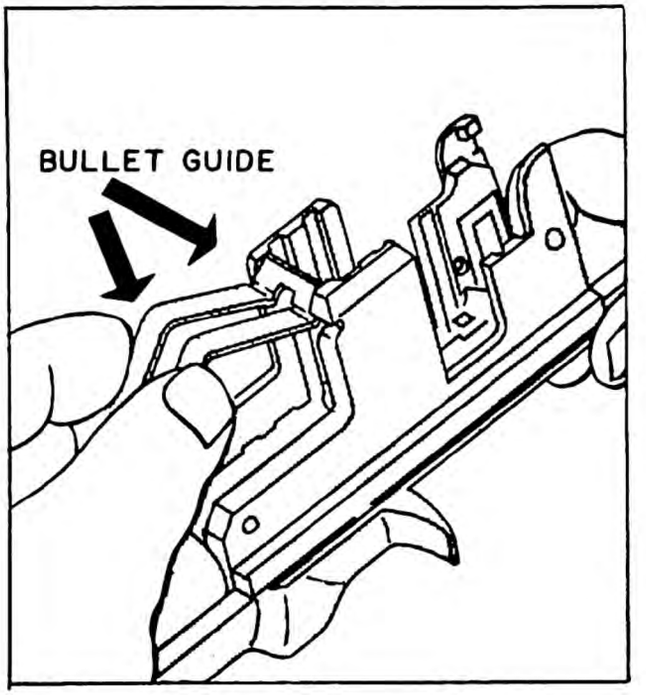

Figure 3-10

Operating Rod Catch Assembly

With your right thumb and forefinger, lift up the lower part of the bullet guide slightly. With the left thumb and forefinger, insert the rear arm of the operating rod catch assembly through the clearance cut in the side of the bullet guide (fig. 3-11). Make sure the rear arm is underneath the front stud of the clip latch which projects into the receiver.

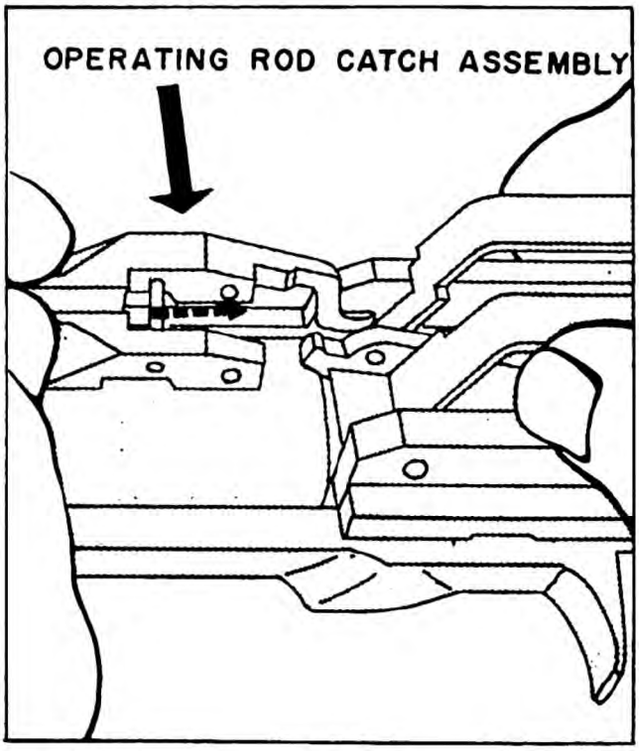

Figure 3-11

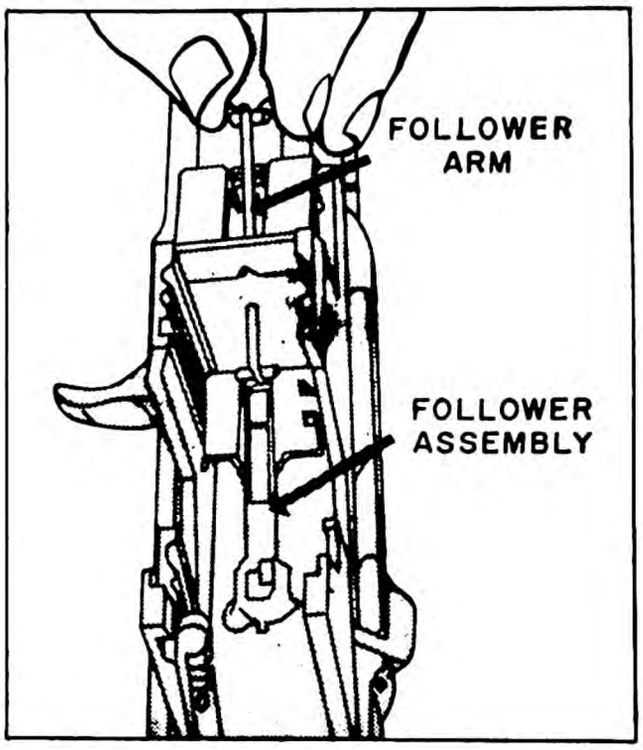

Figure 3-12

Follower Arm

Grasp the follower arm with the thumb and forefinger of the left hand, passing the rear studs through the bullet guide. Insert the legs into the guide grooves of the follower (fig. 3-12). Allow the wings of the follower arm to rest and ride the toe of the bullet guide. Aline the hole in the operating rod catch assembly with the hole in the follower arm. With the thumb and forefinger of the right hand, insert the follower-arm pin away from your person.

Operating Rod Spring and Follower Rod

Insert the operating rod spring into the operating rod. Grasp the follower rod with the thumb and forefinger of the left hand, being sure the hump is toward the barrel. Pull toward the muzzle, compressing the operating rod spring, and engage the claws of the follower rod with the front studs of the follower arm (fig. 3-13). You may have to raise the follower assembly to do this. Check to see that the hump of the follower rod fits down between the front arms of the operating rod catch assembly.

ASSEMBLY OF THE THREE MAIN GROUPS

Place the barrel and receiver group on a flat surface, sights down, muzzle to your left. Pick up the stock group with the right hand and locate the U-shaped flange of the stock ferrule. Engage the U-shaped flange in

the lower band, then lower the stock group down into the barrel and receiver group (fig. 3-14). Unlatch and open the trigger guard, keeping the base of the trigger-housing group level. Place it straight down into the receiver, making sure that the locking lugs on the trigger guard enter the recesses in the receiver (fig. 3-15). Close and latch the trigger guard.

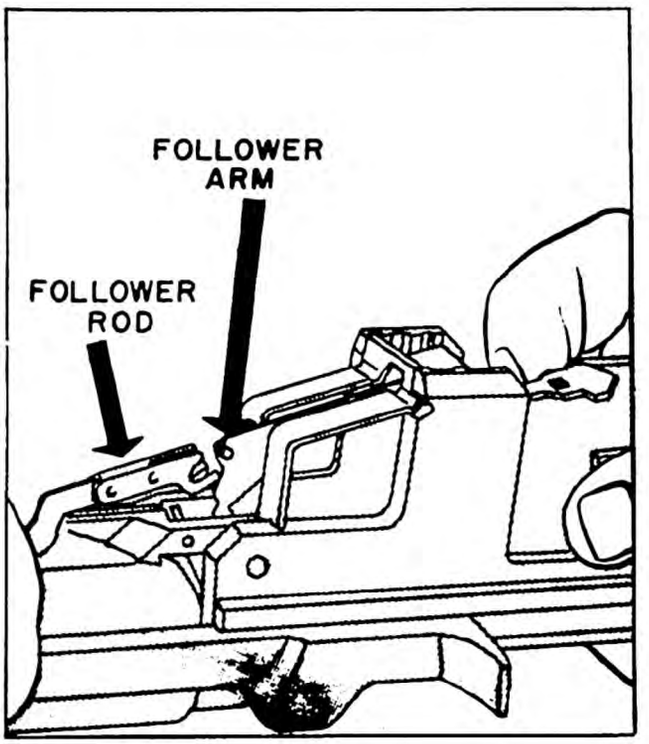

Figure 3-13

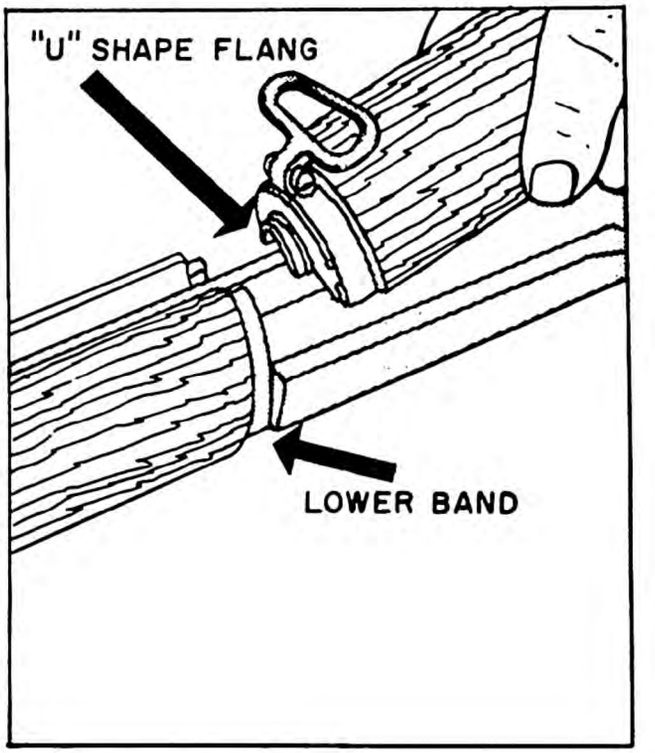

Figure 3-14

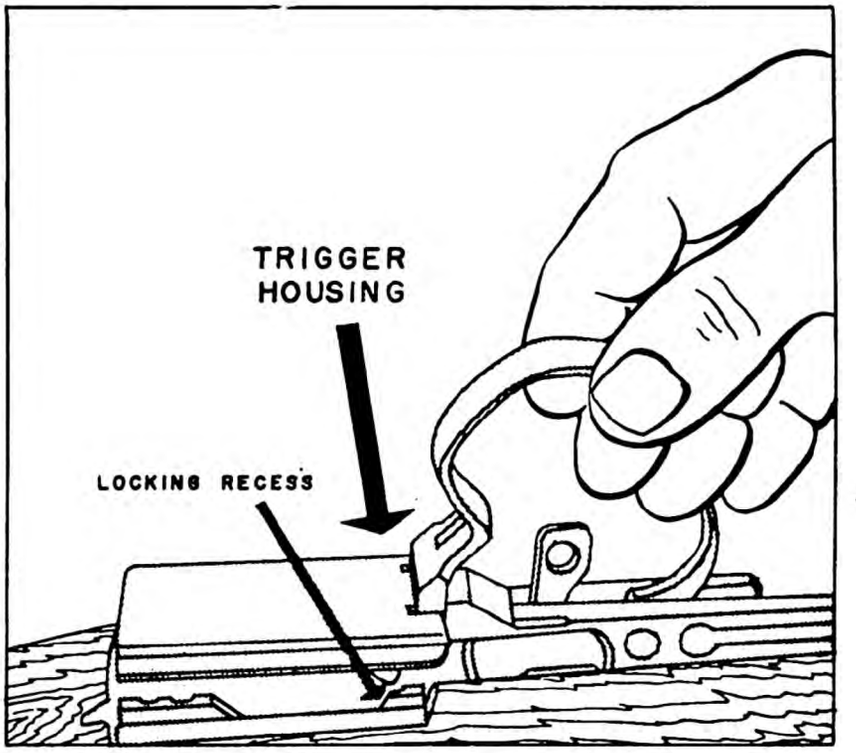

Figure 3-15

TEST FOR CORRECT ASSEMBLY

Each time the rifle is disassembled and assembled, it should be tested to make sure that it is properly assembled. To do this, pull the operating rod to the rearmost position. The bolt should stay open. Close the bolt and place the safety on by pushing into the trigger guard. Squeeze the trigger; the hammer should not fall. Unlock the safety by pushing it forward out of the trigger guard. Squeeze the trigger and the hammer should fall.

NOMENCLATURE, DETAILED DISASSEMBLY AND ASSEMBLY

The rifle should be detailed disassembled only when absolutely necessary and only to replace parts or check for wear or cracks. The first operation in detailed disassembly is to field strip the weapon as was previously outlined.

BOLT

Place the left thumb over the ejector. Insert screwdriver blade between the extractor and lower cartridge seat flange. Twist screwdriver and bolt group will separate (fig. 3-16).

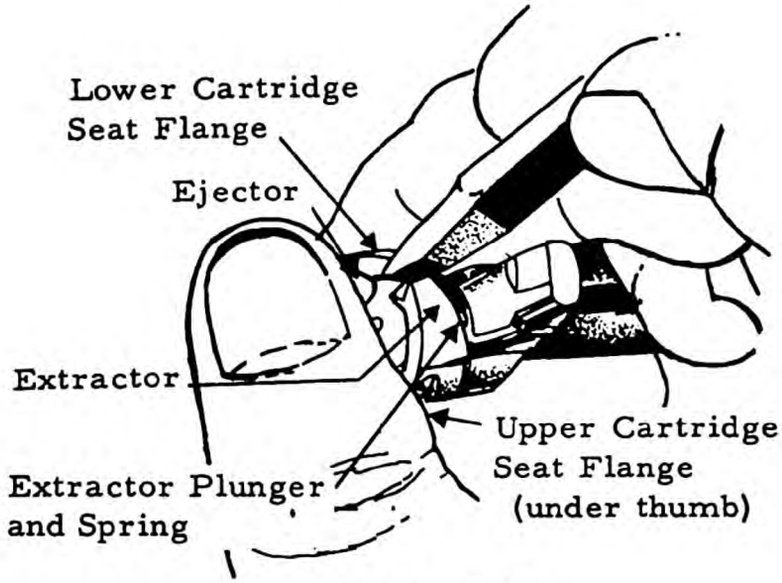

Figure 3-16

CLIP LATCH

Place receiver on right side. Depress clip latch - drift out clip latch pin towards muzzle (fig. 3-17). Lift out clip latch and clip latch spring.

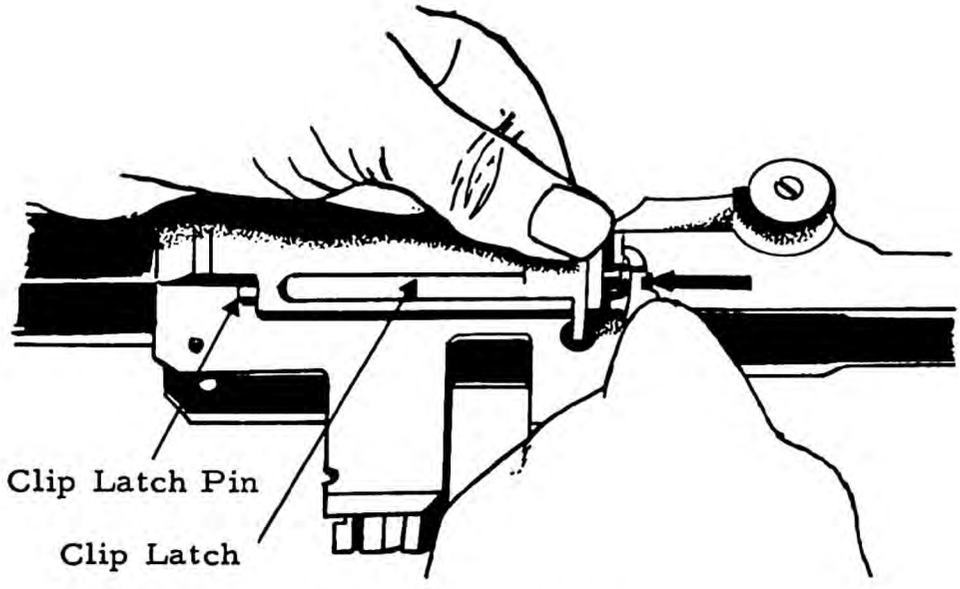

Figure 3-17

REAR SIGHT

Loosen rear sight (center of windage knob). Unscrew the windage knob - withdrawing the elevation knob to the left (fig. 3-18). Raise the rear sight aperture approximately one-half inch and press forward on the aperture with the thumb. This will separate the aperture, rear sight base and cover from the receiver. Separate these three (3) parts.

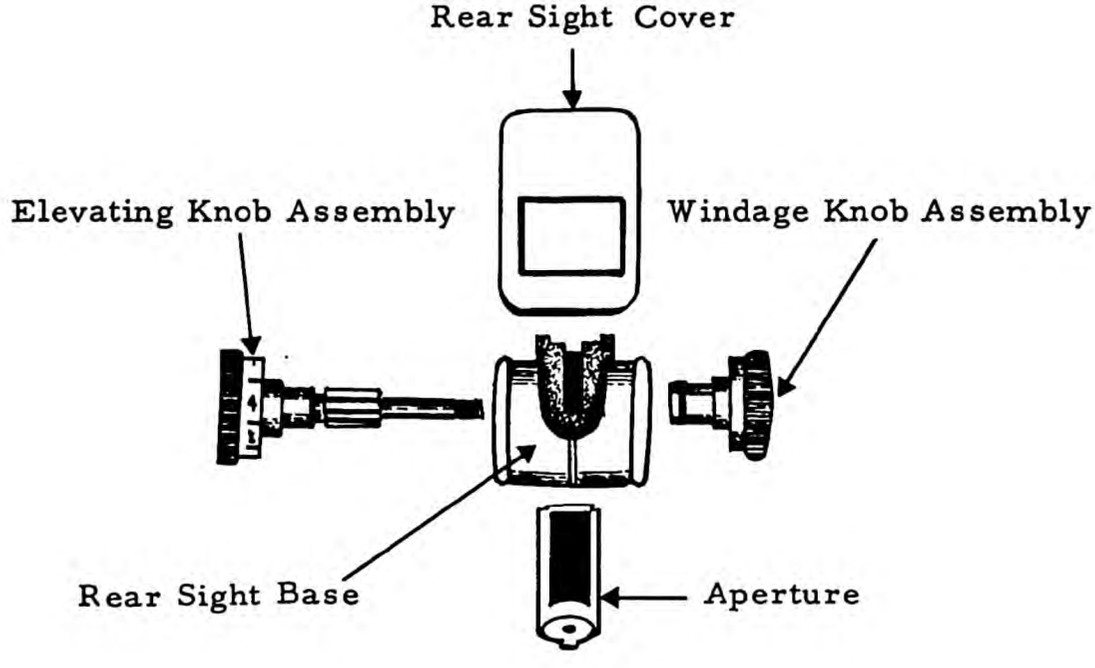

Figure 3-18

GAS CYLINDER GROUP

With the screwdriver, unscrew gas cylinder lock screw (fig. 3-19). Unscrew and remove the gas cylinder lock (fig. 3-20). With soft mallet or block of wood, tap forward on bayonet stud to remove the gas cylinder (fig. 3-21).
NOTE: On rifles with a modified gas cylinder which have a cut extending downward from front sight dove tail to lower splines, it is necessary to loosen front sight screw with three-sixteenths inch Allen wrench before removing gas cylinder.

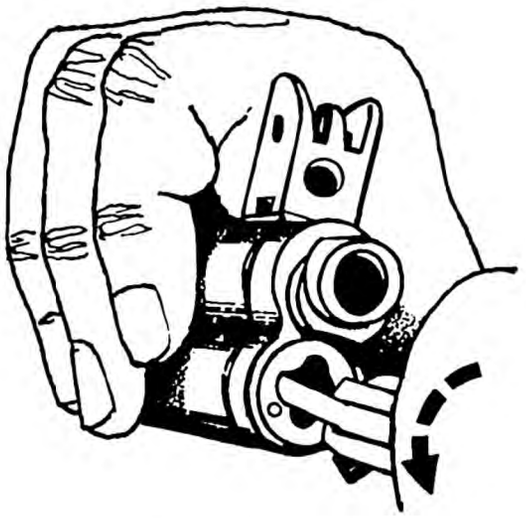

Figure 3-19

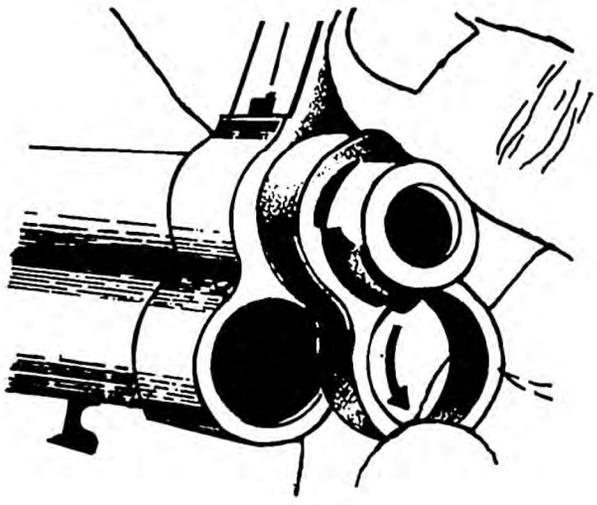

Figure 3-20

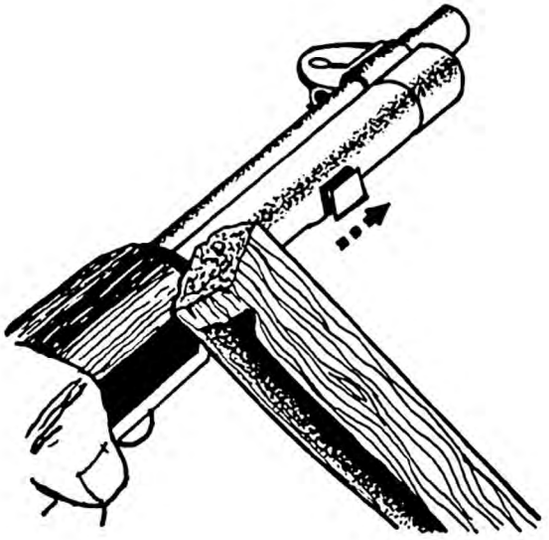

Figure 3-21

TRIGGER HOUSING GROUP

CAUTION: Before disassembling trigger housing group, close and latch trigger guard, squeeze trigger, allowing the hammer to go forward.

A. Squeeze trigger with index finger and at same time, push forward on rear of sear with thumb. Drift out trigger pin from left to right.
NOTE: All pins in trigger housing group are removed from left to right (fig. 3-22).

B. Lift out the trigger assembly, hammer spring, hammer spring plunger and hammer spring housing. Separate these parts.

C. Drift out the hammer pin and remove the hammer.

D. Unlatch the trigger guard and drift out the safety from its stud hole. Remove the safety.

E. Swing the trigger guard down and rearward until the trigger guard can be rotated counterclockwise and removed.

F. Lay the trigger housing on its right side and push out the clip ejector by inserting a drift through the clip ejector disassembly port.

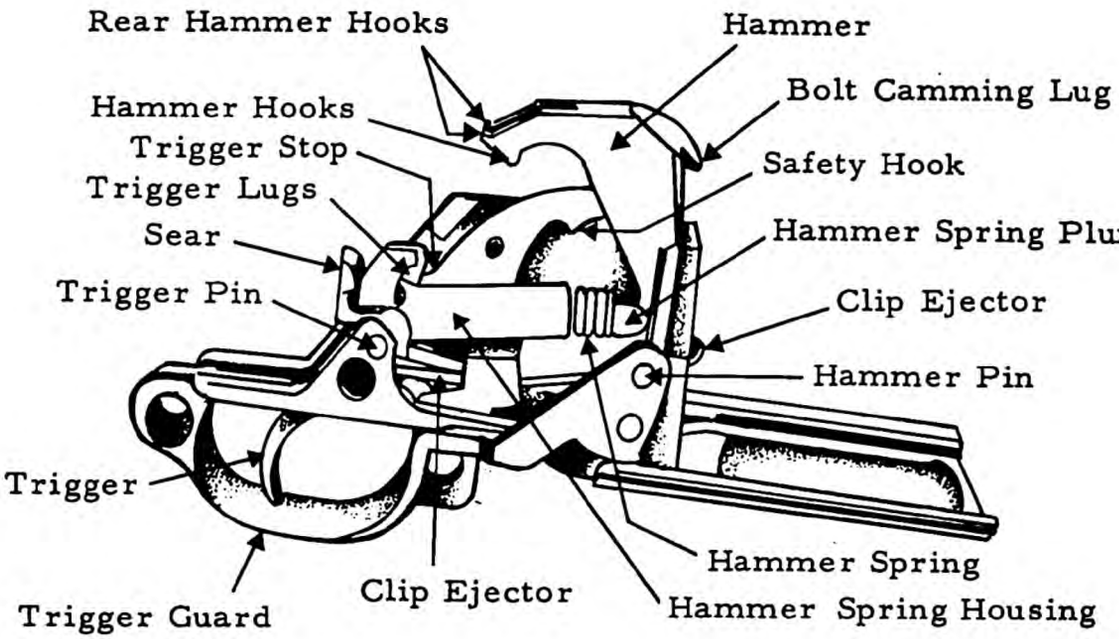

Figure 3-22. The trigger housing group.

ASSEMBLY FROM DETAIL STRIP

BOLT GROUP

Assemble parts, making sure that the ejector has the keyway for the extractor (fig. 3-23) pin facing toward the operating lug. Press the extractor until it begins to override the extractor plunger, then depress ejector into face of bolt until keyway lines up with extractor pin. Press on extractor until it locks the ejector in place.

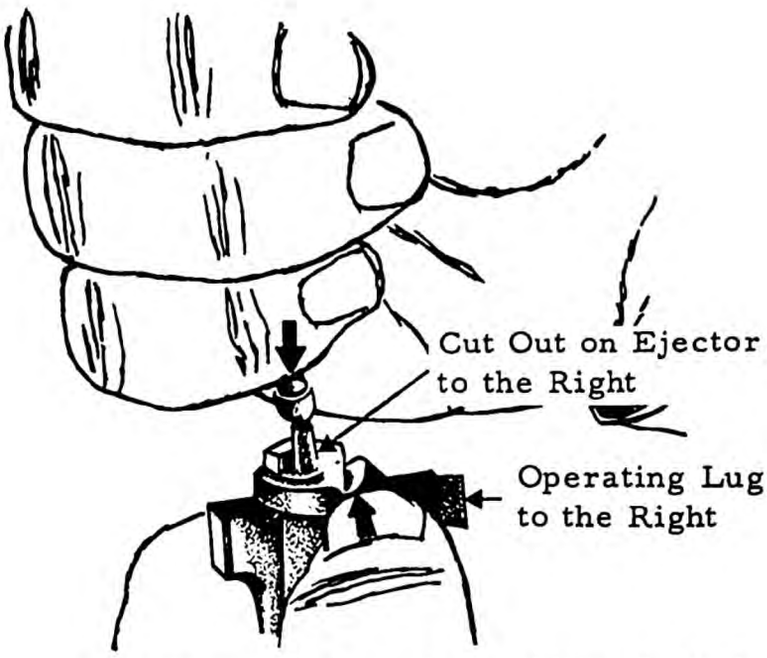

Figure 3-23. Assembling the bolt.

CLIP LATCH

Assemble clip latch in reverse order of disassembly.

REAR SIGHT

Pre-position the rear sight base, aperture and rear sight cover. Place on receiver and snap cover into recesses on receiver. This locks cover, base and aperture in place. Insert the elevation knob from the left, making sure that the "D" shaped rod mates with "D" shaped recess in sight base. Push base all the way left. Insert windage knob and screw into sight until base comes to center. Tighten rear sight nut.

GAS CYLINDER GROUP

Replace gas cylinder, mating splines. Screw on the gas cylinder lock. NOTE: If the gas cylinder lock screws on past the gas cylinder, back off the lock until it lines up with cylinder. Screw on the gas cylinder lock screw.

TRIGGER HOUSING GROUP

A. Hold the trigger housing in your right hand, with the left side down and the rear end to the right. Place clip ejector in position in the trigger housing with the short arm toward your body and the tip of the long arm in its slot in front of the trigger housing. The loop of the clip ejector is positioned on top of its stud on the left side of the trigger housing. With your right thumb, hold the loop of the clip ejector on top of this stud. With the forefinger of your hand, hold the long arm up in its slot on the front of the trigger housing. Place the tip of your left thumb between the

long arm and the base of the trigger housing and move the long arm toward your body, at the same time exerting pressure downward. The long arm of the clip ejector will snap into the notch on the base of the trigger housing (fig. 3-24).

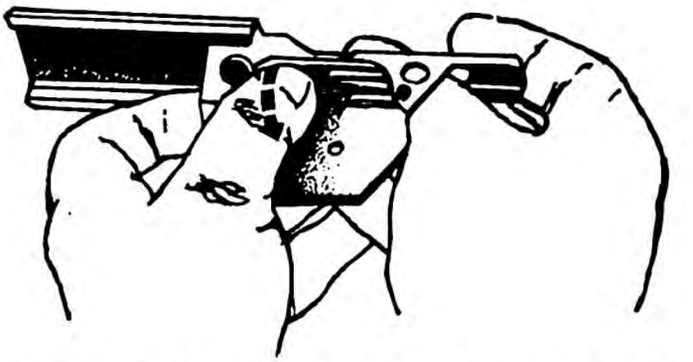

Figure 3-24. Replacing the clip ejector.

B. Replace the trigger guard, leaving unlatched. Replace the safety, seating pin in its hole. Place safety on "Safe" position.

C. Replace the hammer, making sure that toe of hammer is above hammer stop pin inside of trigger guard. Line up the holes in trigger guard and hammer - replace the hammer pin.

D. Pre-position the hammer spring housing, hammer spring and plunger. Place cutaway on hammer housing toward safety. Place plunger in notch on hammer. Insert trigger assembly into its place (fig. 3-25). Trigger pin holes in hammer spring housing should straddle toe of sear. Squeeze trigger with index finger, pressing the rear of sear with thumb. When holes in trigger and hammer spring housing line up with holes in trigger housing, replace trigger pin. NOTE: Trigger pin will not seat flush at this point.

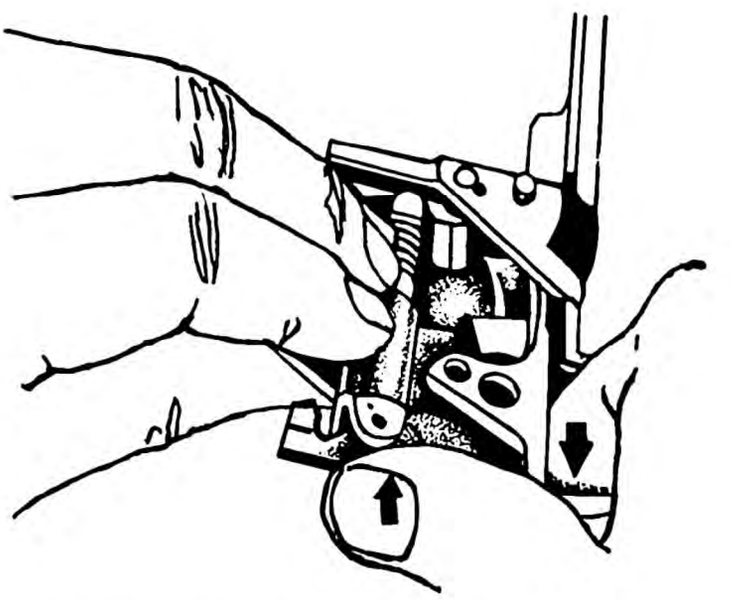

Figure 3-25. Replacement of the trigger assembly, hammer spring housing, hammer spring, and hammer spring plunger.

E. With thumb against front of trigger housing and index finger at rear of the trigger (fig. 3-26) press forward on trigger and trigger pin will seat when pressure is applied on head of pin.

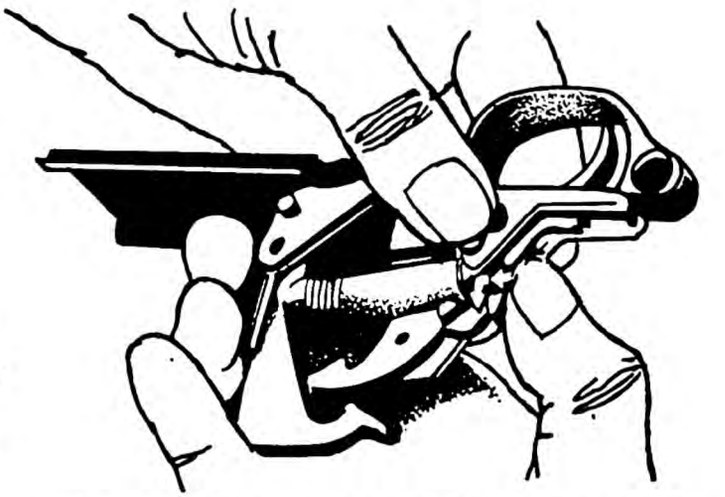

Figure 3-26. Seating the trigger pin.

IMMEDIATE ACTION, STOPPAGES, AND MALFUNCTIONS

There will be times when your rifle will not operate properly or will not operate at all. This is called a malfunction or stoppage. If either of these actions occur at a moment when your rifle is needed, there are steps you may take to put your rifle back into operation. These steps are called immediate actions. Learn to perform them quickly and accurately.

Stoppages

A stoppage is any unintentional interruption in the cycle of operation. In other words, it is a failure of the rifle to fire through no fault of the firer. Most stoppages occur because of dirty, worn, or broken parts, and the lack of lubrication. The rifleman must be taught to watch for these defects and correct them before they cause a stoppage. Some of the more common stoppages, with their usual causes and remedies, are shown in the table on the following page. (Note: The stoppages are classified according to the steps of the cycle of operation.)

IMMEDIATE ACTION

Immediate action is the prompt action taken by the firer to reduce a stoppage. To apply immediate action, pull the operating rod handle all the way to the rear with the right hand, palm up, then release it. Next, aim the rifle and try to fire. If a rifleman learns to apply immediate action quickly and properly when his rifle fails to fire, he will be able to reduce most stoppages.

Malfunctions

A malfunction is the failure of the weapon to function satisfactorily. Some of the common malfunctions are:

The clip may jump out on the seventh round. Usually, this is caused by a bent follower rod and can be corrected by replacing it.

The rifle may fire in bursts of two or three rounds. This is due to the sear being broken, worn, or remaining in an open position. It can be corrected by replacing the trigger assembly.

The safety may release when pressure is applied to the trigger. This can be caused by a broken safety or by the trigger stop on the safety being worn. It can be corrected by replacing the safety. You have become acquainted with the common stoppages, malfunctions, and their immediate actions for the M1 rifle. Someday, your life or your buddy's life may depend on what you have learned, so be sure that you absorb the material in this section.

Stoppage	Cause	Remedy
Failure to feed----	Lack of lubrication of operating parts.	Clean and lubricate parts.
	Defective or worn parts.	Replace parts.
Failure to chamber	Lack of lubrication of operating parts.	Clean and lubricate parts.
	Defective ammunition.	Replace ammunition.
	Dirty chamber-----	Clean chamber.
Failure to lock-----	Lack of lubrication of operating parts.	Clean and lubricate parts.
	Dirty locking recesses.	Clean recesses.
	Weak operating rod spring.	Replace spring.
Failure to fire-----	Defective ammunition.	Replace ammunition.
	Defective firing pin.	Replace firing pin.
	Defective trigger housing group.	Repair trigger housing group.
Failure to unlock	Dirty chamber------	Clean chamber.
	Lack of lubrication of operating parts.	Clean and lubricate parts.
	Insufficient gas-----	Clean gas port or replace worn parts.
Failure to extract--	Dirty chamber-----	Clean chamber.
	Dirty ammunition.	Replace ammunition.
	Broken extractor.	Replace extractor.
Failure to eject----	Broken ejector-----	Replace ejector.
Failure to cock----	Defective trigger housing group.	Repair trigger housing group.

Chart 2. Stoppages: Their causes and remedies.

FUNCTIONING

As you fire the M1 rifle there is a series of actions that take place which consists of ejecting the cartridge, cocking the weapon, feeding and chambering a new cartridge into the rifle. These actions are called "functioning." Basically, the functioning of the M1 rifle has two steps: (1) Rearward movement ejects the cartridge and cocks the rifle; (2) the forward movement feeds and chambers the cartridge in the rifle.

Cycle of Operation

Each time a round is loaded and fired, many parts inside the rifle work in a given order. This is known as the cycle of operation. This cycle is similar in all small arms. A knowledge of what happens inside the rifle during this cycle of operation will help you understand the causes and remedy for various stoppages.

The cycle of operation is broken down into eight steps. These steps are listed in our Student Study Guide, together with a brief description of what actually occurs inside the rifle during each step. Assume that a full or partially filled clip was loaded in the rifle and that the first round had been fired and the bolt is in its rearmost position (fig. 3-27).

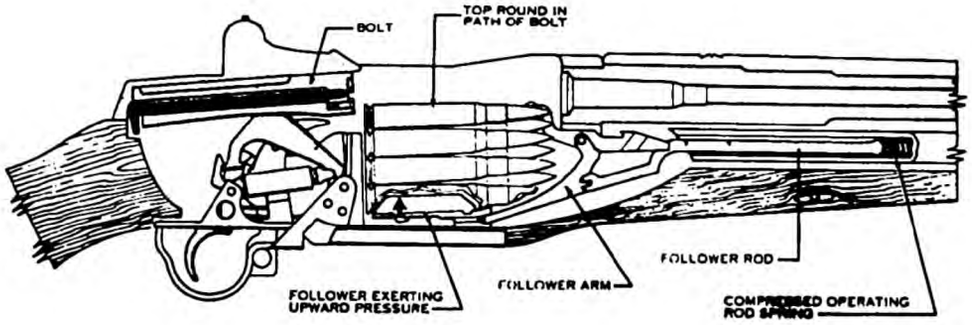

Figure 3-27

Forward Movement

The forward movement of the functioning of the M1 rifle consists of three steps: (1) feeding, (2) chambering, and (3) locking. These steps are explained in the next three paragraphs.

FEEDING takes place when a round is moved into the path of the bolt. This is done by the follower exerting an upward pressure on the bottom round in the clip. The follower is continuously forced up by the pressure of the operating rod spring through the follower rod and follower arm (fig. 3-27).

CHAMBERING occurs when a round is moved into the chamber. This takes place as the bolt goes forward. It picks up the top round in the clip and drives it forward into the chamber (fig. 3-28). Chambering is complete when the extractor snaps into the extracting groove on the cartridge case and the ejector is forced into the face of the bolt.

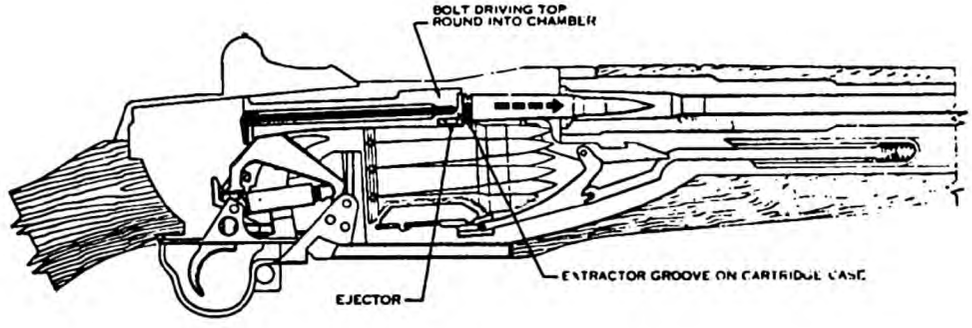

Figure 3-28

LOCKING occurs when the bolt is closed tight. This prevents the loss of gas pressure until the bullet has left the muzzle. The bolt is locked by the rear camming surface in the recess of the hump in the operating rod, forcing the operating lug of the bolt down. This engages the locking lugs on the bolt with their recesses in the receiver (fig. 3-29).

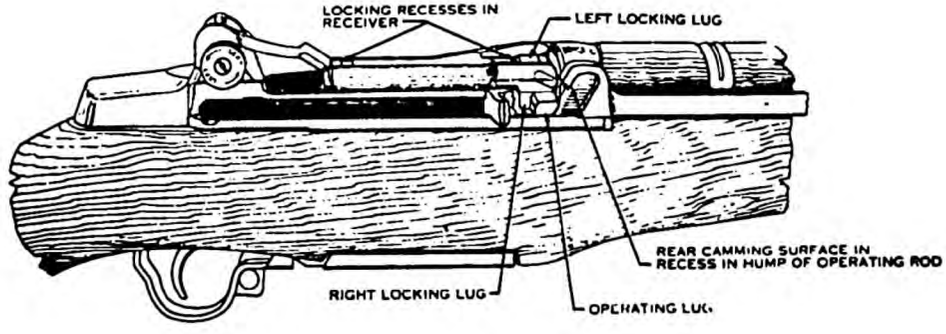

Figure 3-29

Rearward Movement

There are five steps in the rearward movement: (1) firing, (2) unlocking, (3) extracting, (4) ejecting, and (5) cocking. This is the termination of the rearward movement. These movements occur as explained in the next five paragraphs.

FIRING occurs when the firing pin strikes the primer of the cartridge. When the trigger is squeezed, the trigger lugs are disengaged from the hammer hooks and the hammer is released. The hammer moves forward and strikes the tang of the firing pin, driving the firing pin against the primer on the cartridge, activating it and firing the round (fig. 3-30). If the bolt is not locked, the bolt will rotate to a fully locked position. This is done when the camming lug strikes the camming surface on the rear face of the bolt.

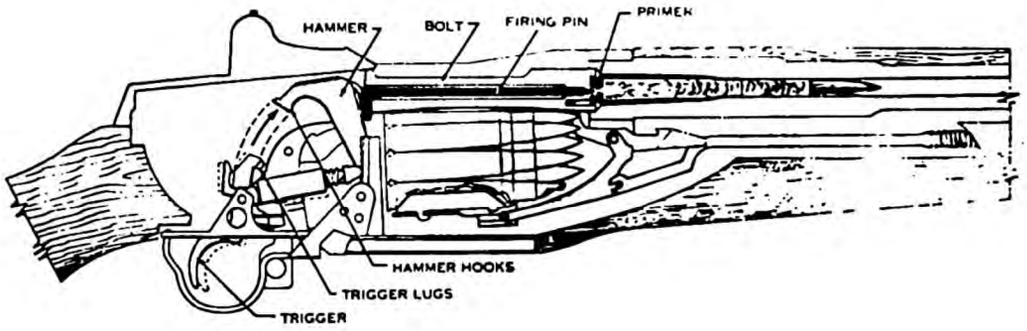

Figure 3-30

UNLOCKING occurs after the firing of the round. As the bullet is forced through the barrel by the expanding powder gas, a small portion of the gas escapes through the gas port into the gas cylinder, forcing the operating rod to the rear (fig. 3-31). As the operating rod moves to the rear there is no movement of the bolt until the operating rod has moved about 5/16 of an inch. This is accomplished by the bolt sliding in the straight recess in the operating rod. This delay in the movement of the bolt permits the bullet to leave the barrel; whereas, decreasing the chamber pressure in the barrel and the camming surface inside the recess in the hump of the operating rod forces the operating lug of the bolt upward, disengaging the locking lugs from their recesses in the receiver. The bolt is thus unlocked and ready to be moved to the rear (fig. 3-32).

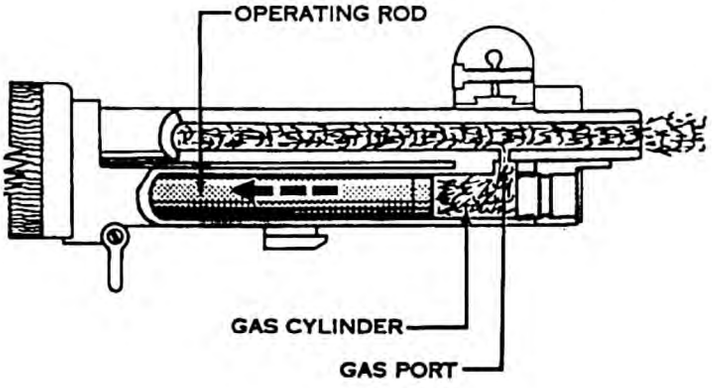

Figure 3-31

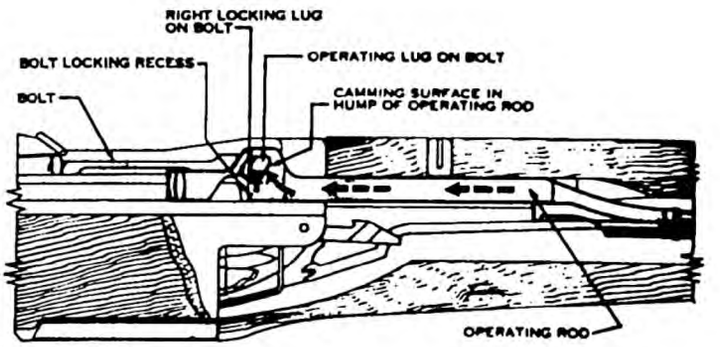

Figure 3-32

EXTRACTING is pulling the empty cartridge case from the chamber. The extractor which is engaged with the extracting groove on the cartridge case withdraws the empty case as the bolt moves to the rear (fig. 3-32a).

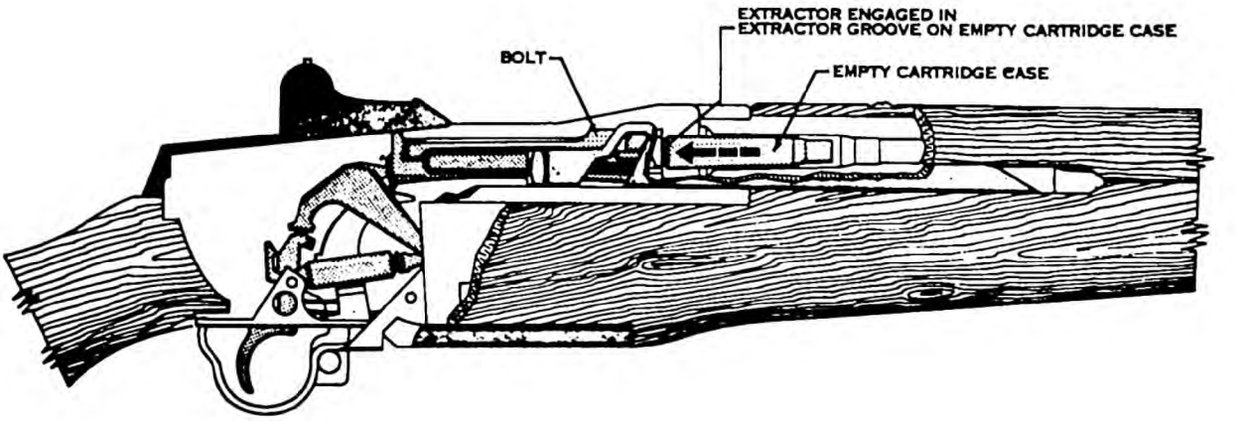

Figure 3-32a

EJECTING is throwing the empty case from the rifle. As the bolt moves to the rear, withdrawing the case from the chamber, the round is held in place by the chamber walls. When the mouth of the empty case clears the chamber, it is ejected up and to the right front by the ejector spring and the ejector.

COCKING occurs when the hammer is forced into the proper position for firing the next round. This happens as the bolt continues to the rear. The rear end of the bolt forces the hammer back and rides over it. The hammer is caught by the sear if the trigger is still held to the rear, but by the trigger lugs if the trigger pressure has been released (fig. 3-33).

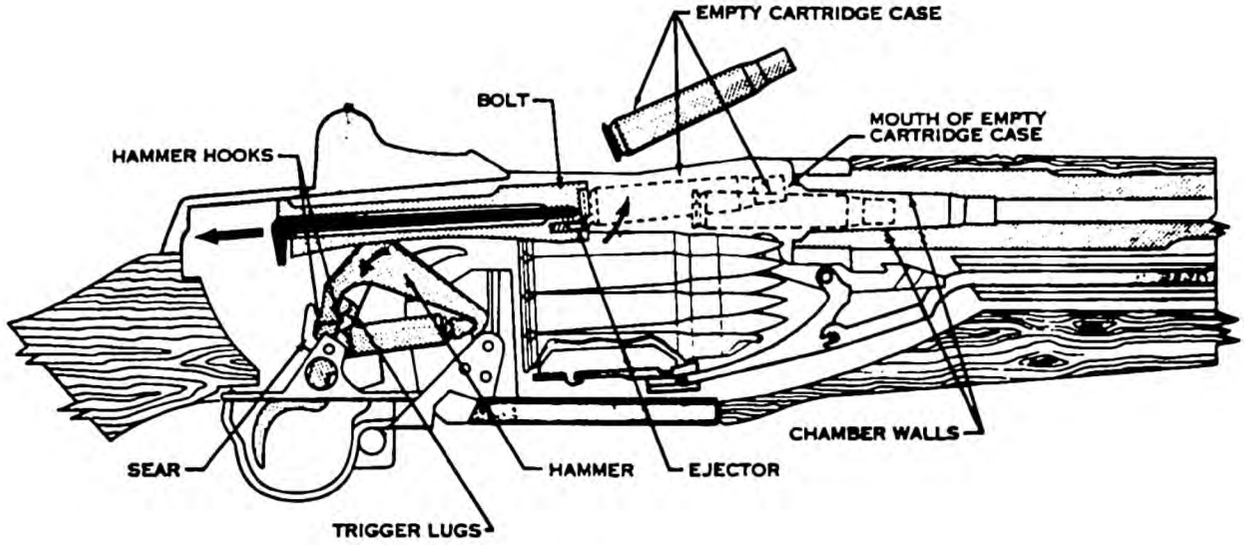

Figure 3-33

This is the termination of the rearward movement, as the operating rod contacts the front face of the receiver.

SIGHT ADJUSTMENTS

Basis to all rifle shooting is that the rifle should hit where its sights are planted. Differences in the way individuals hold and aim make it necessary to have adjustable sights on your rifle. It is necessary that you sight your weapon at the ranges being fired. The adjustment once made may later be affected by a fall or other accidents, or may be changed by someone handling the rifle unobserved. It will thus need verifying at intervals.

The rear sight can be adjusted to correct for a wind that is strong enough to blow a bullet off its course, or simply to change the strike of the bullet to another spot on the target. The strike of the bullet can be made higher or lower, or can be moved left or right. These knobs make audible clicks when they are turned (fig. 3-34).

Each of these clicks changes the strike of the bullet one minute to one and one-half minutes, depending on the weapon. The elevation may be adjusted from 0-72 clicks. Windage may be adjusted 16 clicks right or left of the index line. Before the shooter can use the rear sight properly, he must be able to estimate wind velocity, and apply the proper counteraction with a windage adjustment. The shooter must also be able to figure sight changes as necessary.

As the wind is the only weather condition which will affect the flight of the bullet, it is one of the most important factors in good shooting. The shooter must be able to estimate three things when considering wind effect:
(1) wind direction,
(2) wind velocity, and
(3) the range of the target.

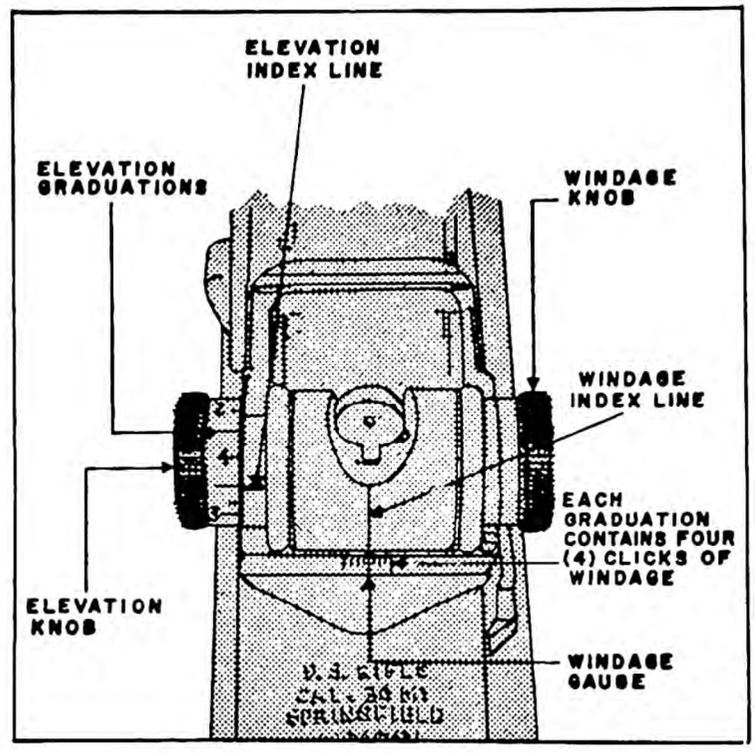

Figure 3-34

Wind Direction

The direction of the wind can be determined by observing the range flag, trees, grass, etc. We consider the direction of the wind in relationship to a clock (fig. 3-35). The direction of the wind, as well as its speed, determines how far the bullet is blown off its course as it travels to the target. A wind blowing from 9 o'clock has more effect on the bullet than a wind of the same strength from 7 o'clock. For this reason, winds are classified as full-value winds (fig. 3-36).

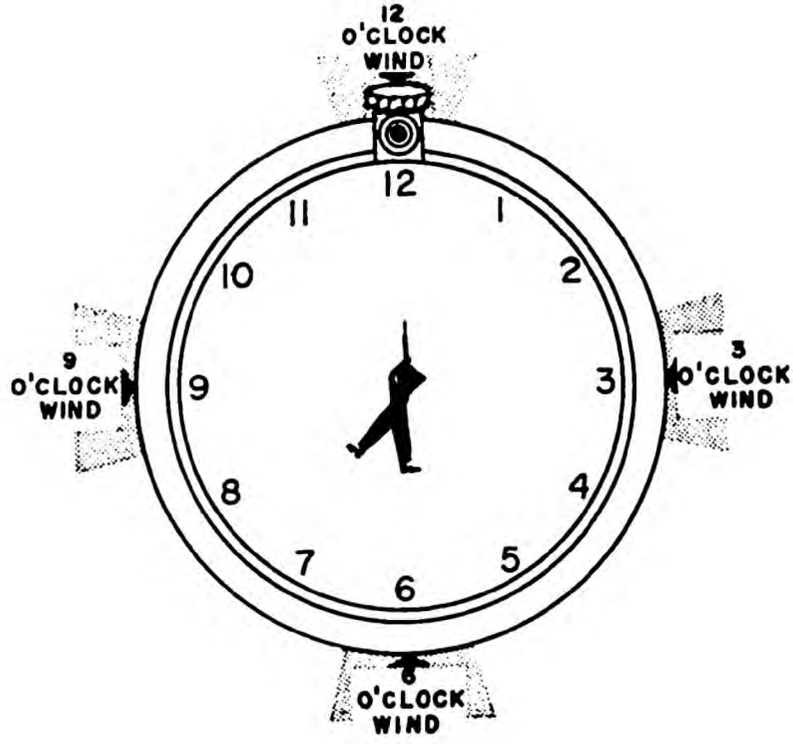

Figure 3-35

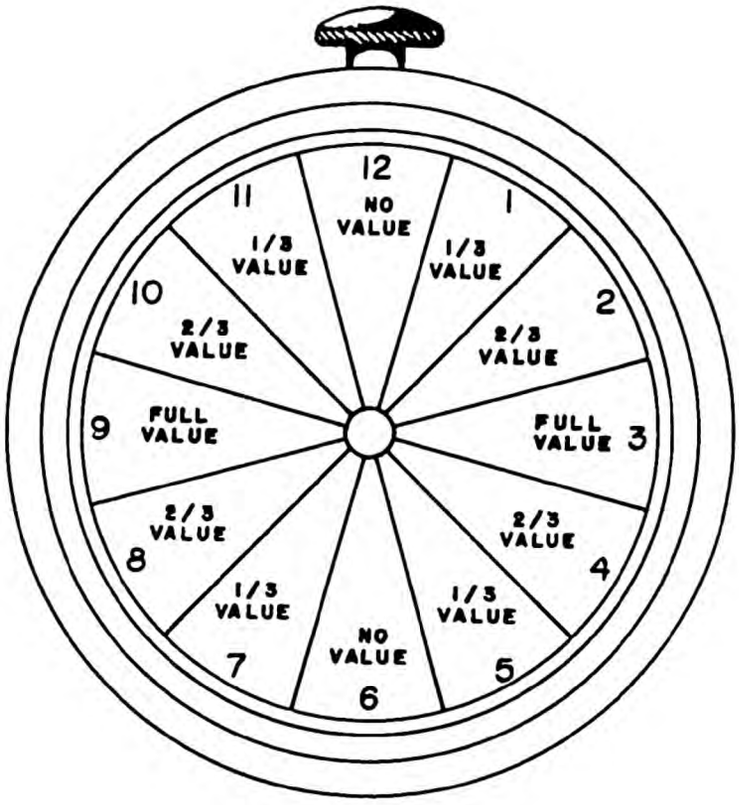

Figure 3-36

SPOTTING SCOPE. The spotting scope can be used to determine the direction of the wind by finely focusing your scope at a distance 100 yards in front of your firing point toward your target. You will then be able to see the mirage clearly. You will notice that the mirage always appears to be flowing directly from either 3 or 9 o'clock, or appears to be boiling when there is no wind or when the wind is blowing from 6 or 12 o'clock. If the mirage is flowing from the right, that means the wind is coming from either 1, 2, 3, 4 or 5 o'clock. To determine which direction, turn or rotate your scope slowly to the right, but not past the 3 o'clock position. While turning the scope, you may notice the mirage flowing from the right change to a "boil." When you see it boil, observe the direction the scope is pointing, and that will be the direction from which the wind is blowing. In this case, it would be from either 1, 2 or 3 o'clock. To determine if the wind is coming from 4 or 5 o'clock, rotate or turn your scope to the left, but not past the 9 o'clock position, until you observe a "boil." When you observe the boil, notice the direction in which the rear or the eye-piece of the scope is pointing, and that will be the direction from which the wind is blowing. Use the same system for wind blowing from the left. By constant use of the "spotting scope" during firing, you will soon be able to estimate wind velocity or value by observing the flow of the mirage increasing or decreasing in speed.

Wind Velocity

The three methods which may be used to determine wind velocity are: (1) range flag, (2) grass or paper, and (3) natural objects.

RANGE FLAG. The position of the range flag indicates strength of the wind. As the wind blows the flag, it forms an angle to its pole. To determine wind velocity in miles per hour, estimate the angle in degrees between the flag and the pole and divide the angle by four. The answer will be the approximate wind velocity in miles per hour. An example of this method is illustrated in figure 3-37.

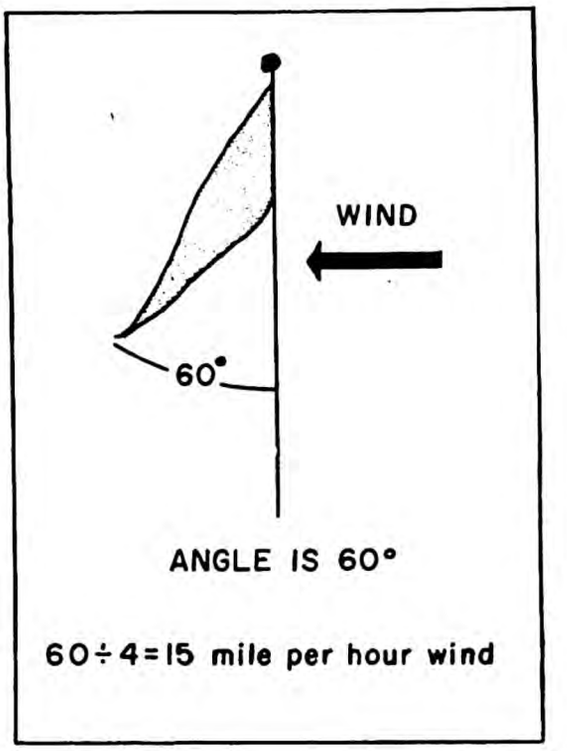

Figure 3-37

GRASS OR PAPER. When there is no range flag available, the shooter may use a similar system. He does this by dropping small bits of paper, leaves, or dry grass from the shoulder and pointing to the place they land. The angle formed by the arm with the body can be used to determine the wind velocity.

NATURAL OBJECTS. Wind velocity may be determined by observing its effects on natural objects. Three-miles-per-hour wind can hardly be felt (only smoke drift will show it). A three- to five-mile wind can be felt on the face; with a five- to eight-mile wind, leaves are in constant motion. An eight- to twelve-mile wind raises dust and loose paper; whereas, a fifteen-mile wind sways small trees.

Range to the Target

The farther the bullet travels, the longer it is exposed to the effect of the wind; and the longer it is exposed to the wind, the farther it drifts off its course. For this reason, more windage must be put on the rear sight to compensate for wind drift at long ranges than at short ranges (fig. 3-38). Range is always expressed in 100-yard units to compute the effect of wind.

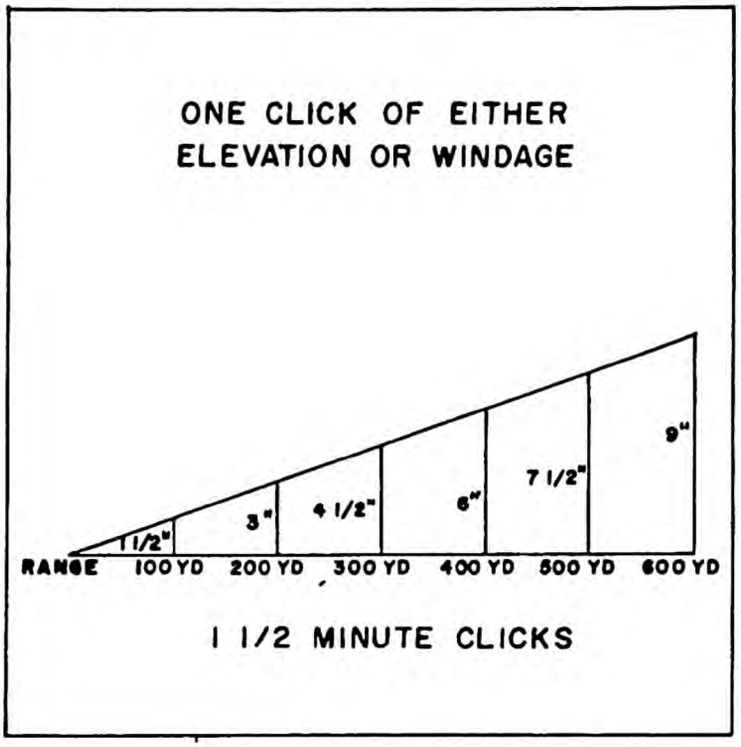

Figure 3-38

Wind Formula

After the firer has learned to establish wind direction, wind velocity, and range to the target, he can then use this information to make corrections on the rear sight by using the wind formula.

R = Range to targets in hundreds of yards.
V = Velocity of wind in miles per hour.

15 and 10 are constant figures used to represent Match ammo and Ball ammo, respectively.

Example: Range 300 yds
Velocity 15 MPH

R = 3
V = 15

$$\frac{R \times V}{15} = \frac{3 \times 15}{15} = \frac{45}{15} = 3$$ **clicks full wind value**

As the shooter learns how to figure the number of clicks to correct for the wind, he must then learn how to properly place these clicks on the rear sight. In order to accomplish this, move the rear sight into the wind. If the wind is blowing from 9 o'clock, you must move the rear sight to the left. This is done by turning the windage knob to the rear. Remember, the wind formula is used for the first shot or shot group only.

Elevation Windage Rule

After the shooter compensates for wind drift by using the wind formula, he must make additional sight changes to move the strike of the bullet into the center of the bull's-eye by using the elevation windage rule. This rule is: One click of either elevation or windage will move the strike of the bullet approximately one to one and a half inches on the target for every 100 yards of range (fig. 3-38).

Sight Changes

You know how to apply the elevation windage rule. All you need now is the dimensions of the target. When you have accomplished both of the above, you may make sight changes to move the strike of the bullet into the center of the bull's-eye. The shot group in figure 3-28 is 9" low and 9" to the right. You are firing from 600 yards. Using the minute-and-a-half rule, you will move your elevation knob one click upward and one click to the left. This will put your shot group into the center of the bull's-eye.

Zeroing

The sight setting that produces several shots or a group in the center of the bull's-eye is the rifle's Zero for the range being fired. Your rifle should be zeroed for all the different ranges you fire. In order to get the zero, put into practice all the information on sight adjustments listed in this Student Study Guide.

MAINTENANCE OF U.S. RIFLE, CALIBER .30, M1

INSPECTION

Inspection consists of visual and operational check. Look for defects such as corrosion, broken or missing parts, binding and burrs on operating parts. Operate rifle, checking for sluggish action or weak springs. All parts should operate freely. If any of these conditions exist, closer inspection should be made to determine cause. Broken or defective parts should be replaced as authorized in applicable directives.

CARE AND CLEANING

The rifle operates best when cleaned and lubricated. Parts coming in contact with gasses should be cleaned with bore cleaner. All other parts are wiped with oily rags. All parts handled with hands should be lightly oiled. Wooden parts should be oiled with linseed oil. Leather parts should be oiled with neats-foot oil. Research applicable directives for special preservations to be utilized for extreme weather conditions and storage of weapons over long periods of time.

TOOLS AND GAUGES

Many special tools and gauges are used in the maintenance and inspection of the rifle. Two of the most useful tools are the combination tool (fig. 3-39) and the handle of the M10 cleaning rod. Either of these tools can be used in disassembly and assembly of the rifle. Other special tools and their use are outlined in the following paragraphs.

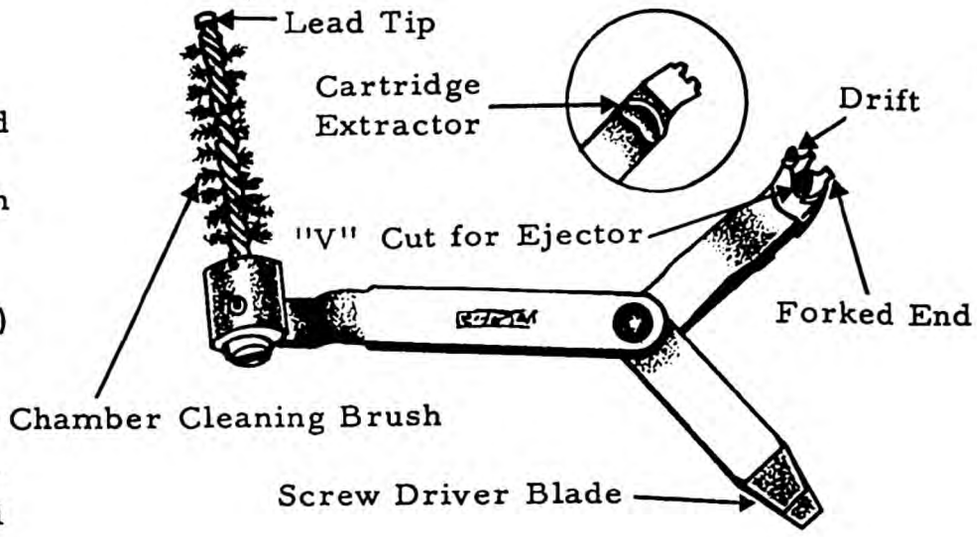

Figure 3-39. The combination tool.

HEAD SPACE

Head space in the U.S. Rifle, Caliber .30, M1 is measured from the shoulder of the chamber to the face of the bolt. This head space is measured with special head space gauges which are found in the following sizes: 1.940 inches ("Go"-gauge); 1.946 inches (used for head space inspection prior to storage of weapons); 1.950 inches ("No go" gauge). The "No go" gauge is used in conjunction with a special made bolt called the "field test bolt" to determine if the chamber, bolt or bolt locking recesses are the cause of head space faults. Head space gauges are used as follows:

Disassemble the operating rod from the bolt. Place "No go" gauge under the extractor and close bolt, using no force. If bolt closes on "no go" gauge, replace normal bolt with "field test bolt." If bolt does not close on field test bolt and "no go" gauge, replace original bolt with new one after checking head space on new bolt with gauges (fig. 3-40).

FIRING PIN PROTRUSION

Firing pin protrusion is checked with a gauge specifically made for this purpose. The gauge is cylindrical with a moving pin within. The gauge is placed over the bolt and the firing pin pushed forward into the "fired" position. The pin in the fired position should protrude 0.049-0.059 inches. The gauge is so marked that these readings can easily be read.

BARREL DIAMETER

Barrel diameter is checked at the gas port with a gauge made in shape of a ring. The ring is placed over the barrel at the gas port with a snug fit indicating an acceptable diameter (fig. 3-41).

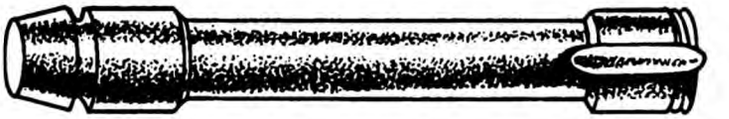

1. 940 Inches (41-G-200-75) Go-Gauge
1. 946 Inches (41-G-200-100) Storage Gauge
1. 950 Inches (41-G-200-130) No-Go Gauge

Figure 40. Gauge, headspace.

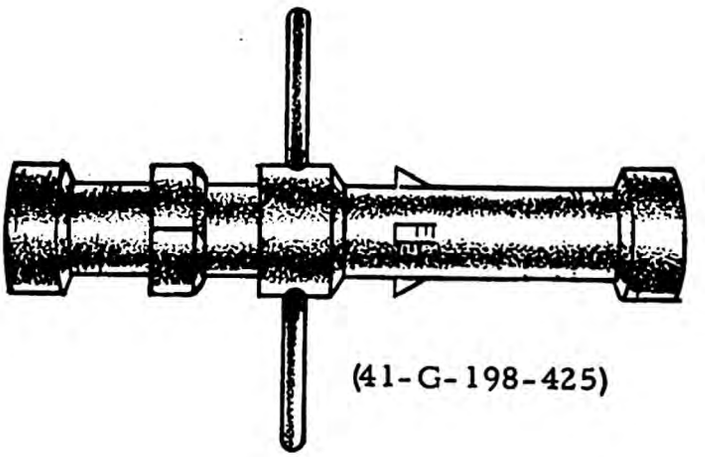

(41-G-198-425)

Figure 3-41. Gauge, gas cylinder diameter.

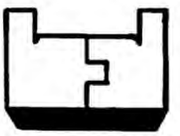

(41-G-236-85)

Figure 3-42. Gauge, "no-go," piston



(41-G-236)

Figure 3-43. Gauge, "no-go," barrel diameter at gas port.

GAS PORT

Gas port obstruction may be cleared by passing a drill through the port. The drill must not exceed 0.0805 inches in diameter.

GAS PISTON

The gas piston is checked with special "go" "no go" gauges. These gauges have stepped recesses to indicate minimum and maximum tolerances (fig. 3-42).

GAS CYLINDER

Inside diameter of gas cylinder is checked with cylindrical, two-headed "go," "no go" gauge. (fig. 3-43).

QUESTIONS

1. Why do we have adjustable sights on the M1 rifle?
2. What three things must you know to adjust sight setting?
3. How far will one click move the strike of the bullet at 200 yards?
4. What removes the empty cartridge from the chamber?
5. As long as the trigger is to the rear, what holds the hammer in the cocked position?
6. What is the cycle of fire?
7. What is a stoppage?
8. How is immediate action applied?
9. What must you do if your rifle fires in multiple bursts?
10. Why is it important for you to learn the nomenclature of the M1 rifle?
11. How far will one click of windage move the strike of the bullet at 300 yards?
12. What are the three main parts of the M1 rifle?

REFERENCE

FM 23-5, U.S. Rifle, Caliber 30, M1

RANGE FIRING: RIFLE
RIFLE, CAL. .30, M1
RIFLE, CAL. .22
U.S. CARBINE, CAL. .30, M1 or M2
RIFLE, M-16, 5.56mm

OBJECTIVE

To become familiar with the distances, positions, time limit, and qualifying scores for the prescribed courses of fire with the Rifle, Cal. .22, the U.S. Carbine, Cal. .30, M2, the Rifle, Cal. .30, M1, and the Rifle, M-16, 5.56mm.

INTRODUCTION

The following courses of fire are the courses that you will fire with the Cal. .22 Rifle, the U.S. Carbine, Cal. .30, M1, the Rifle, Cal. .30, M1, and the Colt Armalite, 5.56mm, M-16 Rifle while you are attending the rifle phase at the USAF Marksmanship Training Course. Actual range firing is the final period of instruction received in the rifle phase. This is where you will apply all the fundamentals of rifle marksmanship learned until this time. Your scores will depend upon how well you apply these fundamentals. The M-16 is a newer addition to our weapons inventory. Courses of fire for this weapon are found in the latter pages of this Guide.

RIFLE CAL. .22 COURSES

The "Dewar Course" for the Rifle, Cal. .22 is a competitive course of fire, as outlined in the NRA Rule Book. This course of fire is extremely beneficial in detecting errors in sight alignment, breath control, and trigger control. Five shots will be fired at each of the four lower "bulls" of the official 50-yard smallbore target. The top bull's-eye will be used for sighter shots. On the 100-yard stage, ten shots are fired at each of the lower two "bulls." The topmost bull is used for sighting shots. The shooter should fire three or four shots into the backstop before using the sighter bull; these shots are called fouling or warming shots. They are used, as the name implies, to warm and foul the barrel; the reason being that a rifle when warm and fouled will group differently than a clean and cool rifle. Note, however, that sighter warming and fouling shots will be fired in the total time allotted for the required scoring shots. See figures 6, 8, 10, 12-1 and 2 for the targets used in this match. The match is fired as shown on next page.

TARGETS USED	RANGE (YARDS)	TIME LIMITS	NUMBER OF ROUNDS
50 yd	50	20 minutes	20
100 yd	100	20 minutes	20

NUMBER OF ROUNDS EACH TARGET	POSITION USED	POSSIBLE SCORE
5	Prone	200
10	Prone	200

This course is fired twice, with telescopic sights for a total score for the four stages of 800 points.

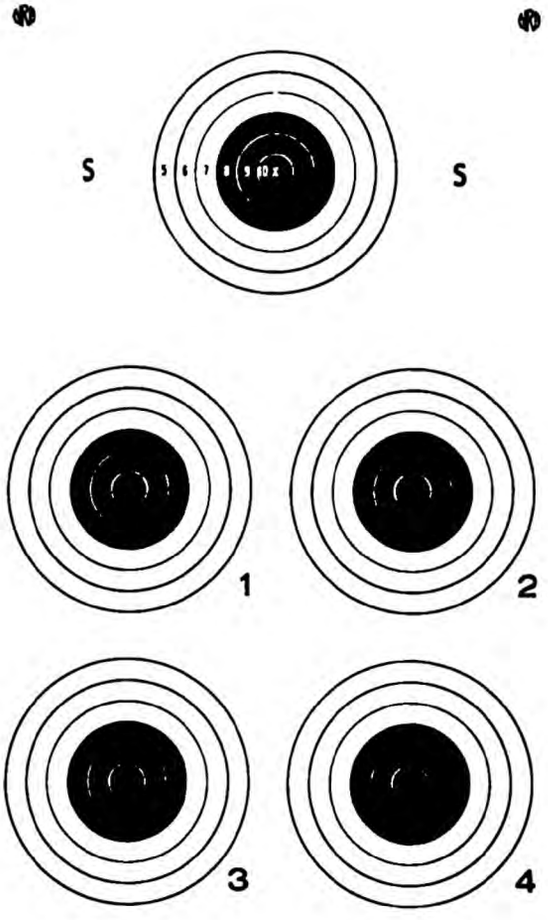

TARGET DIMENSIONS (50-yd)

X ring	.39
10 ring	.89
9 ring	1.89 inches
8 ring	2.89 inches
7 ring	3.89 inches
6 ring	4.89 inches
5 ring	5.89 inches

Figure 6, 8, 10, 12-1. 50-yd target.

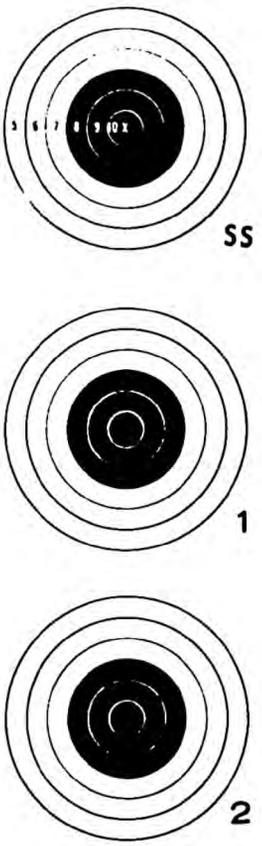

Figure 6, 8, 10, 12-2
100-yd target

TARGET DIMENSIONS

X ring --- 1 inch
10 ring --- 2 inches
9 ring --- 4 inches
8 ring --- 6 inches
7 ring --- 8 inches
6 ring --- 10 inches
5 ring --- 12 inches

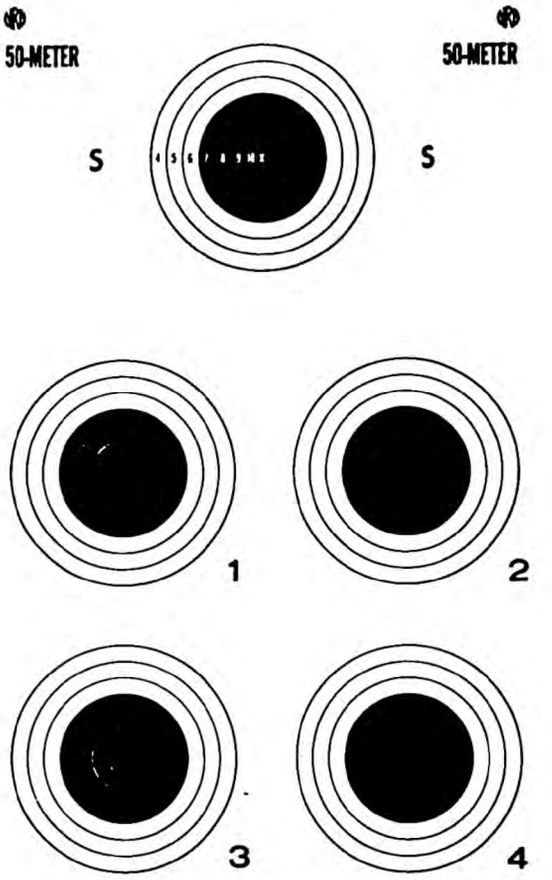

Figure 6, 8, 10, 12-3

TARGET DIMENSIONS

X ring --- .359 inches
10 ring --- .719 inches
9 ring --- 1.439 inches
8 ring --- 2.159 inches
7 ring --- 2.879 inches
6 ring --- 3.599 inches
5 ring --- 4.319 inches
4 ring --- 5.510 inches

The "1600-point aggregate" is a course of fire that will give you an opportunity to fire at each of the targets normally used in outdoor competition. This is an "any sight" match which means that you will have the choice of using either "metallic" or "telescopic" sights. It is fired as the table on the next page indicates.

TARGETS	RANGE (YARDS)	TIME LIMITS
50 yd	50	20 minutes
50 yd	50	20 minutes
50 meter reduced	50	20 minutes
50 meter reduced	50	20 minutes
50 yd	50	20 minutes
100 yd	100	20 minutes
100 yd	100	20 minutes
100 yd	100	20 minutes

NUMBER OF ROUNDS	POSITION	POSSIBLE SCORE
20	Prone	200 points
20	Prone	200 points
20	Prone	200 points
20	Prone	200 points
20	Prone	200 points
20	Prone	200 points
20	Prone	200 points
20	Prone	200 points
	Total possible score	1600 points
	Master	99% or above
	Expert	98% to 98.99%
	Sharpshooter	97% to 97.99%
	Marksman	Below 97%

The "four-position, 200-point course" is the course of fire that may be used by units not having ready accessibility to adequate ranges. YOU will be firing this course for familiarization. The course is fired with "metallic" sights only.

TARGETS	RANGE (YARDS)	TIME LIMITS
SB-A 50 yd	50	10 minutes
SB-A 50 yd	50	10 minutes
SB-A 50 yd	50	10 minutes
SB-A 50 yd	50	10 minutes

NUMBER OF ROUNDS	POSITION	POSSIBLE SCORE
10	Prone	50 points
10	Standing	50 points
10	Kneeling	50 points
10	Sitting	50 points
	Total possible score	200 points
	Expert	173-200 points
	Sharpshooter	156-172 points
	Marksman	140-155 points

U. S. RIFLE CAL . 30 Ml

Instructional firing with the Ml is used to teach the fundamentals of rifle marksmanship and sustained fire cadence. You will be given ball & dummy drills and one- and three-shot exercises. The one-and three-shot drills are used to teach the shooter to take a position and reload rapidly. When firing the National Match Course, you have 50 seconds to fire 10 rounds at 200 yards and 60 seconds to fire 10 rounds at 300 yards. The timing is broken down in this manner: At 200 yards, you have 6 seconds to take a position, 6 seconds to reload, and 3 1/2 seconds to fire each round, with 3 seconds as a buffer. At 300 yards, you have 6 seconds each for position and reloading and 4 1/2 seconds for each round; also, a 3-second buffer. The targets used are the military "A" and "B. "(See figures 6, 8, 10, 12-4 and 6, 8, 10, 12-5.)

Exercise	Nr Rounds	Range (yd)	Time	Target	Position
Three, 5-shot drills for zero (3 ball & 2 dummy)	9	200	5 min	"A"	Prone
10-shot drill (8 ball & 2 dummy)	8	200	10 min	"A"	Sitting
10-shot drill (8 ball & 2 dummy)	8	200	10 min	"A"	Kneeling
10-shot drill (8 ball & 2 dummy)	8	200	10 min	"A"	Standing
eight, 1-shot drills (three dry runs, 5 live, 3 ball & 2 dummy)	3	200	9 1/2 secs	"A"	Standing to Sitting
five, 3-shot drills (3 dry runs, 2 live)	6	200	22 1/2 secs	"A"	Standing to Sitting
three, 5-shot drills for zero (3 ball & 2 dummy)	9	300	5 min	"A"	Prone
eight, 1-shot drills (three dry runs, 5 live, 3 ball, 2 dummy)	3	300	10 1/2 secs	"A"	Standing to Prone
five, 3-shot drills (3 dry runs, 2 live)	6	300	25 1/2 secs	"A"	Standing to Prone
five, 1-shot drills for zero	5	600	5 min	"B"	Prone
10-shot drills (10 ball, slow fire)	10	600	10 min	"B"	Prone

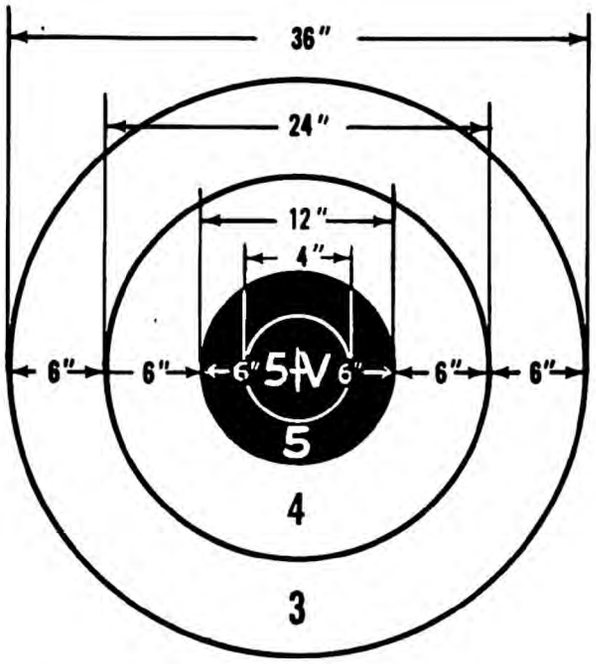

Figure 6, 8, 10, 12-4. The "A" target.

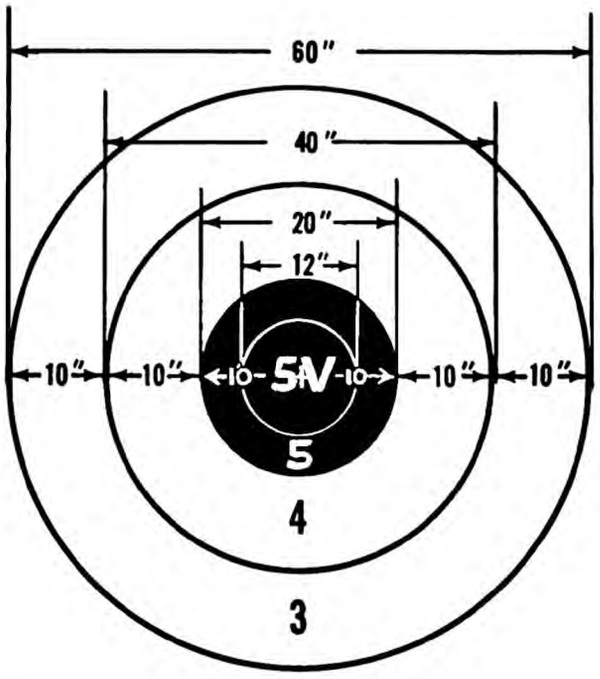

Figure 6, 8, 10, 12-5. The "B" target.

The "National Match Course" for high-power rifles is the most fired of all high-power rifle match courses. It is the match used to determine the national individual rifle champion; the national service rifle championships, both team and individual. It is also the course used in matches fired for distinguished marksman credits. As a student, you must fire this course for score; therefore, a knowledge of the course is required. The match is fired as follows:

TARGET	RANGE (YARDS)	NUMBER OF ROUNDS
"A"	200	*10**
"A"	200	***10
"A"	300	***10
"B"	600	*20**

TIME LIMITS	POSITION	POSSIBLE SCORE
10 minutes	*Standing	50/10v
50 seconds	Sitting (SUST)	50/10v
60 seconds	Prone (SUST)	50/10v
20 minutes	Prone	100/20v
	Total possible score	250/50v
	Master	235
	Expert	225
	Sharpshooter	210
	Marksman	209 & below

*Military position.
**Rounds loaded singly.
***Load 2 rounds, fire, reload w/full clip. Note "V's" used to break ties count no more than ordinary bull's eye.

NOTE: The fourth stage may also be fired from 500 yards. **

U.S. CARBINE, CAL. .30, M1

Instructional firing with the U.S. Carbine, Cal. .30, M1, is used to teach the student the fundamentals of rifle marksmanship, using live ammunition. During this period of instruction, you will be given "ball-and-dummy" exercises. Your weapon will be loaded with either a live or a dummy round. This loading is done by your coach so that you will not know which type is being loaded. This exercise is used to detect and correct errors in aiming and trigger control. The "two-shot" exercise is used to teach you to take a position and reload rapidly. In this course of fire, you have 45 seconds to fire 10 rounds. You are given 6 seconds to take a position, 6 seconds to reload, and 3 seconds to fire each round. This adds up to 42 seconds to fire 10 rounds. The additional 3 seconds are a "buffer," in case you should have difficulty during a string.

Exercise	Nr Rounds	Range	Time	Target	Position
Three, 5-shot drills for zero (3 ball & 2 dummy)	9	100 yds or 1000"	5 min	Mil "A" SBA 50 yd	Prone
10-shot drill (8 ball & 2 dummy)	8	100 yds or 1000"	10 min	Mil "A" SBA 50 yd	Standing
10-shot drill (8 ball & 2 dummy)	8	100 yds or 1000"	10 min	Mil "A" SBA 50 yd	Kneeling
10-shot drill (8 ball & 2 dummy)	8	100 yds or 1000"	10 min	Mil "A" SBA 50 yd	Sitting
six, 2-shot drills (three dry runs)	6	100 yds or 1000"	18 sec	Mil "A" SBA 50 yd	Standing to Sitting
six, 2-shot drills (three dry runs)	6	100 yds or 1000"	18 sec	Mil "A" SBA 50 yd	Standing to Kneeling
six, 2-shot drills (three dry runs)	6	100 yds or 1000"	18 sec	Mil "A" SBA 50 yd	Prone from Standing

The standard Cal . 30 Carbine course is the prescribed course that you will use to qualify USAF personnel with the Carbine. You will fire the course at 100 yards for familiarization and record. The military "A" target is used at 100 yards. (See figure 6, 8, 10, 12-4).

TYPE OF FIRE	RANGE (YARDS)	TIME	ROUNDS
Slow	100	10 minutes	*10
Slow	100	10 minutes	*10
Slow	100	10 minutes	*10
Rapid	100	45 seconds	**10
Rapid	100	45 seconds	**10
Rapid	100	45 seconds	**10

*Rounds loaded singly with empty magazine used as a loading ramp.
**Two magazines loaded with 5 rounds each.

TARGET	POSITION	POSSIBLE SCORE
"A"	Standing	50
"A"	Kneeling	50
"A"	Sitting	50
"A"	Standing to Sitting	50
"A"	Standing to Kneeling	50
"A"	Standing to Prone	50
	Total possible score	300 points
	Expert	276
	Sharpshooter	248
	Marksman	225

Colt Armalite, 5.56mm, M16 Rifle (M-01)

Instructional firing with the M-16 Rifle is used to teach the fundamentals of rifle marksmanship and sustained fire cadence. Full automatic fire is for familiarization only, not for qualification. You will be given ball and dummy drills; six-shot reloading drills; five-shot slow fire drills, and ten-shot sustained fire drills. During ball and dummy exercises the coach will load the weapon so the shooter will not know whether the round is live or a dummy. During these exercises the magazine will be used in the weapon as a loading ramp and will remain in the weapon until the shooter has finished firing or he is told to clear his weapon. The ball and dummy exercise is used for the purpose of zeroing the weapon and to help the coach in detecting and correcting errors in the shooter's aiming and trigger control. The six-shot drill is used to teach you to take the position and reload rapidly. The five-shot slow fire exercises and the ten-shot sustained fire exercises are used to teach you when and how to use all the correct rifle shooting fundamentals in live fire.

Exercise	Nr Rounds	Range (yd)	Time	Target	Position
Three, 5-shot drills for zero (3 ball, 2 dummy)	9*	100	5 min each	"A" or "E"	Prone
two, 5-shot exercise, slow fire	5**	100	30 sec	"A" or "E"	Sitting
two, 5-shot exercise, slow fire	5**	100	30 sec	"A" or "E"	Squatting
two, 5-shot exercise, slow fire	5**	100	30 sec	"A" or "E"	Standing
three, 6-shot exercise, sustained fire	6***	100	35 sec	"A" or "E"	Standing to sitting
three, 6-shot exercise, sustained fire	6***	100	35 sec	"A" or "E"	Standing to squatting
three, 6-shot exercise, sustained fire	6***	100	35 sec	"A" or "E"	Standing to prone
two, 10-shot exercise, sustained fire	10****	100	45 sec	"A" or "E"	Standing to prone
two, 10-shot exercise, sustained fire	10****	100	45 sec	"A" or "E"	Standing to sitting
two, 10-shot exercise, sustained fire	10****	100	45 sec	"A" or "E"	Standing to squatting

KEY: *------coach loads single rounds
**-----one magazine w/5 rounds
***----two magazines w/3 rounds each
****---two magazines w/5 rounds each

NOTE: When a 100-yard range is not available, a 1000" range may be substituted. The Military "D" target will be used at 1000 inches. A SBA-50-yard target may be substituted if the Military "D" is not available.

SCORING: If the Military "A" target is used, scoring will be the same as with the carbine, however, if the Military "E" target is used, each hit is counted as one point. Qualifying scores for the AFQC when fired at 100 yards are as follows:

	%	Mil "E"	Mil "A"
Maximum	100	60	300
Expert	92	55-60	276
Sharpshooter	83	50-54	248
Marksman	75	45-49	225

STUDENTS MUST SHOOT SHARPSHOOTER SCORES OR ABOVE.

FULL AUTOMATIC COURSE OF FIRE
(Familiarization only)

Exercise	Nr Rounds	Range (yd.)	Time	Target	Position
Semi and full auto for zero	6*	15	none	Mil"E"	From the hip, standing
Full auto, short bursts (2-4 rounds)	10**	15	none	Mil "E"	From the hip, standing
Full auto, short bursts (2-4 rounds)	15**	15	none	Mil "E"	From the hip, standing

KEY: *---One magazine loaded w/6 rounds. First three are fired semi-auto, from hip. Second three rounds of same magazine are fired full auto from hip.
**---Total number of rounds indicated for specific exercise all in one magazine and fired full auto from the hip.

NONE: INSTRUCTOR-TO-SHOOTER RATIO DURING FULL AUTO FIRING IS ONE-TO-ONE!!!!!

Targets used for M-16 Rifle firing

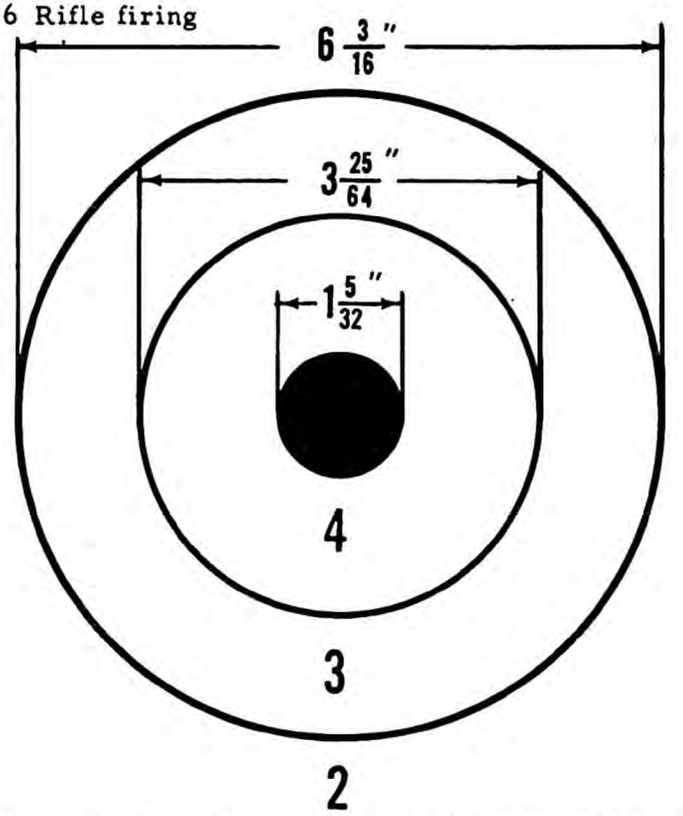

Figure 6, 8, 10, 12-6. Target Rifle "A", 1000 inch.

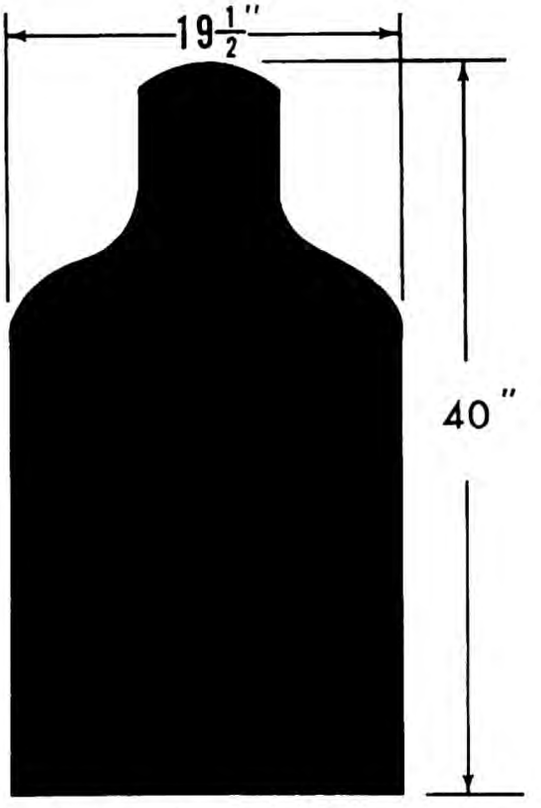

Figure 6, 8, 10, 12-7. Military "E" target.

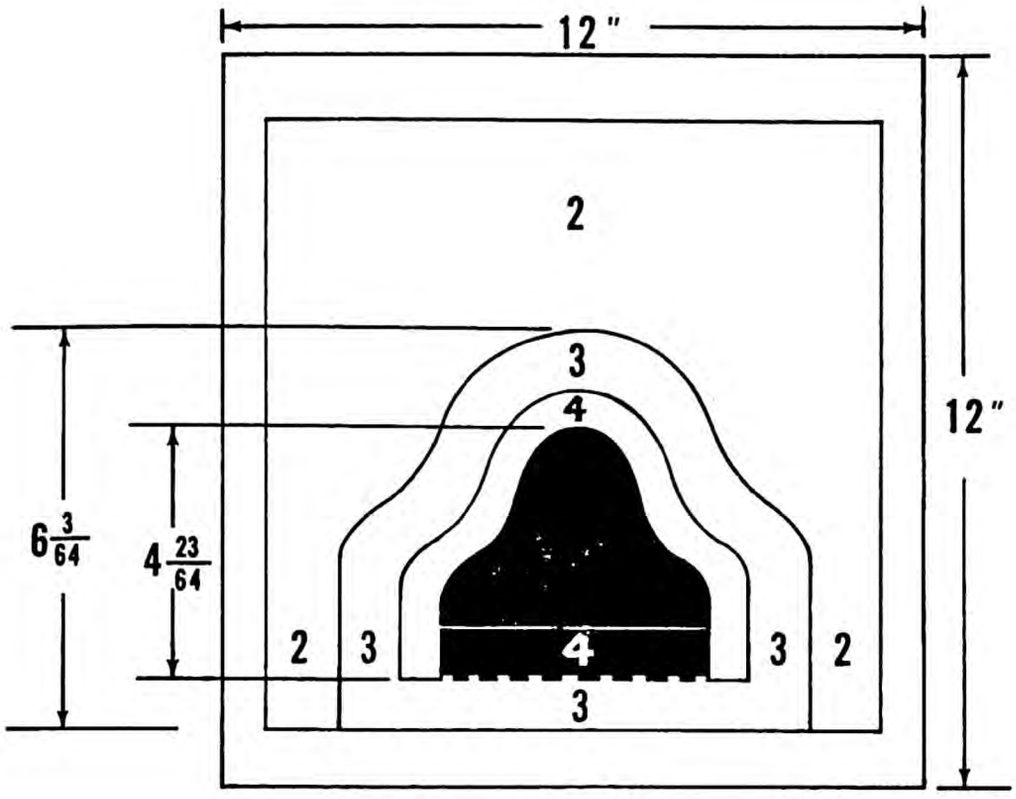

Figure 6, 8, 10, 12-8. Military "D" target.

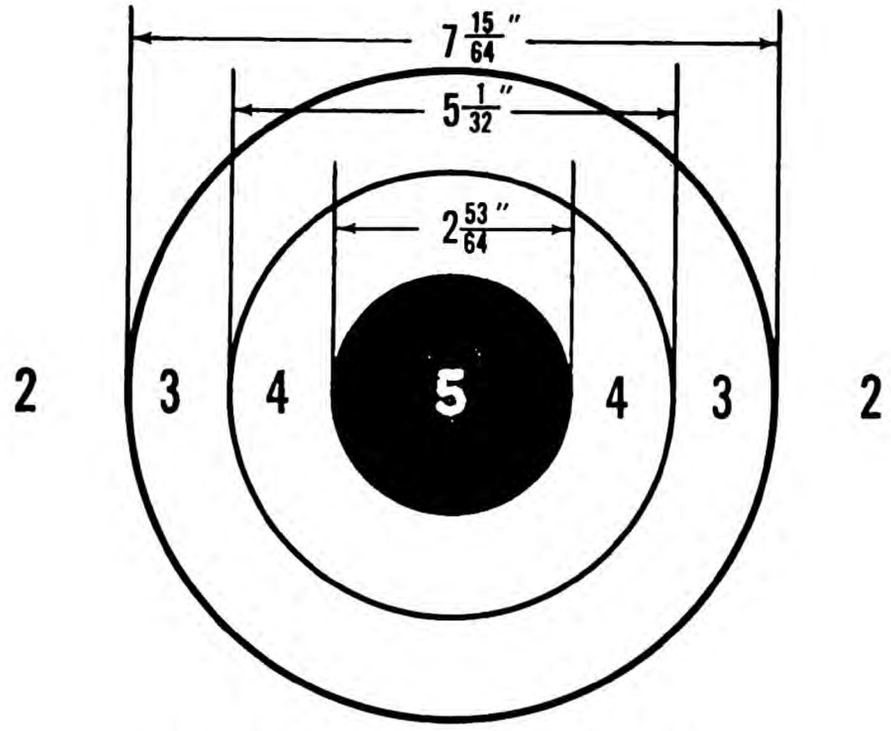

Figure 6, 8, 10, 12-9. SBA 50-yd. target.

SUMMARY QUESTIONS

1. How many and what type of targets are used to fire the "DEWAR COURSE"?
2. What are the dimensions of the 10 rings on the 50-yard, 50-meter reduced and the 100-yard smallbore targets?
3. How many shots are fired at a record bull's-eye during a four-position match?
4. How many seconds are you given to fire each round during sustained fire in the standard carbine course?
5. How many stages are there in the combat qualification course?
6. How many ranges and what targets are used when firing the National Match Course?

BIBLIOGRAPHY AND REFERENCES

NRA Smallbore Rule Book, 1 January 1964.

NRA High Power Rule Book, 1 January 1964.

FM 23-5, US Rifle, Cal. .30, M1, September 1958.

AFM 50-4, US Carbine, Cal. .30, M1, M1A1, M2 & M3, January 1952.

AFM 50-25, Small Arms Ranges.

AFR 50-8, Dated 12 December 1963.

AFM 50-12, Rifle, AR-15, Cal. 5.56 (M-16).